Crystalfontz This LCD controller datasheet was downloaded from https://www.crystalfontz.com/controllers

EK79007AD3

Rev. 1.0

DATA SHEET

1536-Output Source Driver with TCON MIPI Interface

fitipower integrated technology Inc.

Table of Contents

Page

1. GENERAL DESCRIPTION 3
2. FEATURES 3
3. BLOCK DIAGRAM 4
4. APPLICATION BLOCK DIAGRAM 5
   4.1. Dual Gate (1024RGB x 600) 5
5. PAD SEQUENCE 6
6. APPLICATION POWER CIRCUIT 7
7. PIN DESCRIPTION 8
   7.1. Value of wiring resistance to each pin 111
8. MIPI INTERFACE (MOBILE INDUSTRY PROCESSING INTERFACE) 12
   8.1. Display Module Pin Configuration for DSI 13
   8.2. Display Serial Interface (DSI) 15
9. COMMAND DESCRIPTION 20
   9.1. MIPI Control Register 20
10. FUNCTION DESCRIPTION 27
   10.1. Power On/Off Sequence 27
   10.2. Input Data VS Output Voltage 28
   10.3. Input Data and Output Voltage Reference Table 29
   10.4. Input Timing Table (4Lane) 31
   10.5. Input Timing Table (2Lane) 36
11. ABSOLUTE MAXIMUM RATING 37
12. RECOMMENDED OPERATING RANGE 38
13. DC ELECTRICAL CHARACTERISTICS 39
   13.1. Basic DC Characteristic 39
   13.2. MIPI Interface DC Characteristic 40
   13.3. Power Block DC Characteristic 41
14. AC ELECTRICAL CHARACTERISTIC 42
   14.1. Basic AC Characteristic 42
   14.2. MIPI AC Characteristic 43
   14.3. Output Timing Table 53
15. CHIP OUTLINE DIMENSIONS 55
   15.1. Alignment Mark 56
16. PAD COORDINATE 57
17. REVISION HISTORY 73

FITIPOWER CONFIDENTIAL
NO DISCLOSURE

Single Chip 1536 Channel Source Driver with Timing Controller for 1024(RGB) × 600 TFT LCD

1. GENERAL DESCRIPTION

The EK79007AD is a highly integrated solution for small size to middle size a-Si TFT-LCD panels. This chip integrates 1536ch source driver with MIPI input interface.

2. FEATURES

- Special design for middle size TFT LCD Panel with MIPI interface
- Integrate 1536 channel source driver and timing controller with dual gate function
- Support panel resolution (HxV):1024(RGB)x768, 1024(RGB)x600, 800(RGB)x600,800(RGB)x480
- 8-bit resolution 256 gray-scale with dithering(6-bits DAC +2 bits FRC or HFRC)
- Power for MIPI circuit(VDD_IF): 1.8V
- Power for digital circuit(VDD): 1.8V
- Power for analog circuit(AVDD): 8.0V ~ 13.5V
- Support interface: MIPI (4lane/3lane/2lane)
- Embedded Gamma Table for special customer request
- V1~V14 for adjusting Gamma correction
- 1+2 dot inversion architecture
- Built-In VCOM buffer
- Built-In AUTO pattern
- Built-In SDRRS function
- Support no_clock detection
- COG package
- Chip size = 24975um * 695um
- bump height=9um
- Output bump pitch = 15um

FITIPOWER CONFIDENTIAL
NO DISCLOSURE

3. BLOCK DIAGRAM

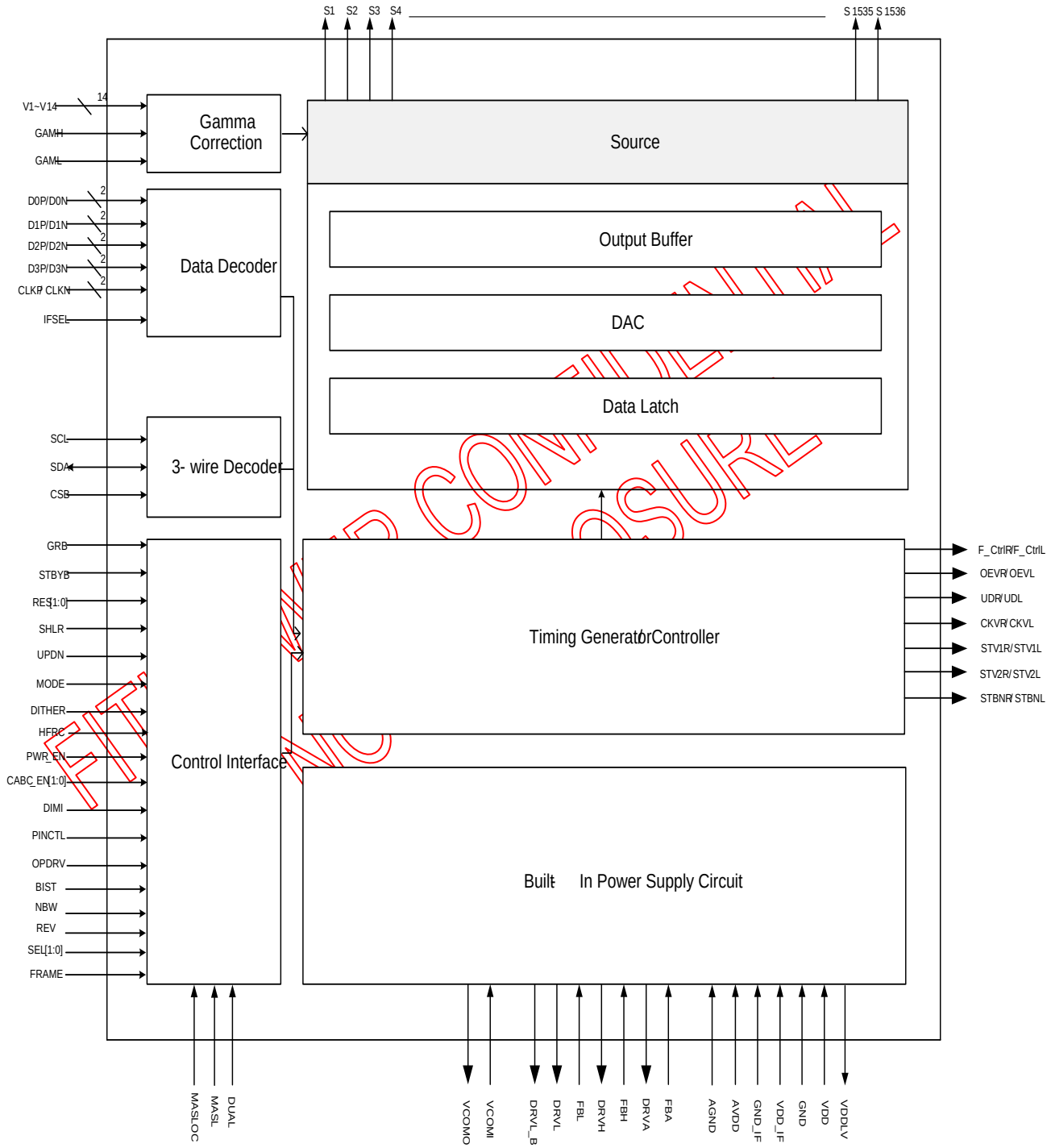

4. APPLICATION BLOCK DIAGRAM

4.1. Dual Gate (1024RGB x 600)

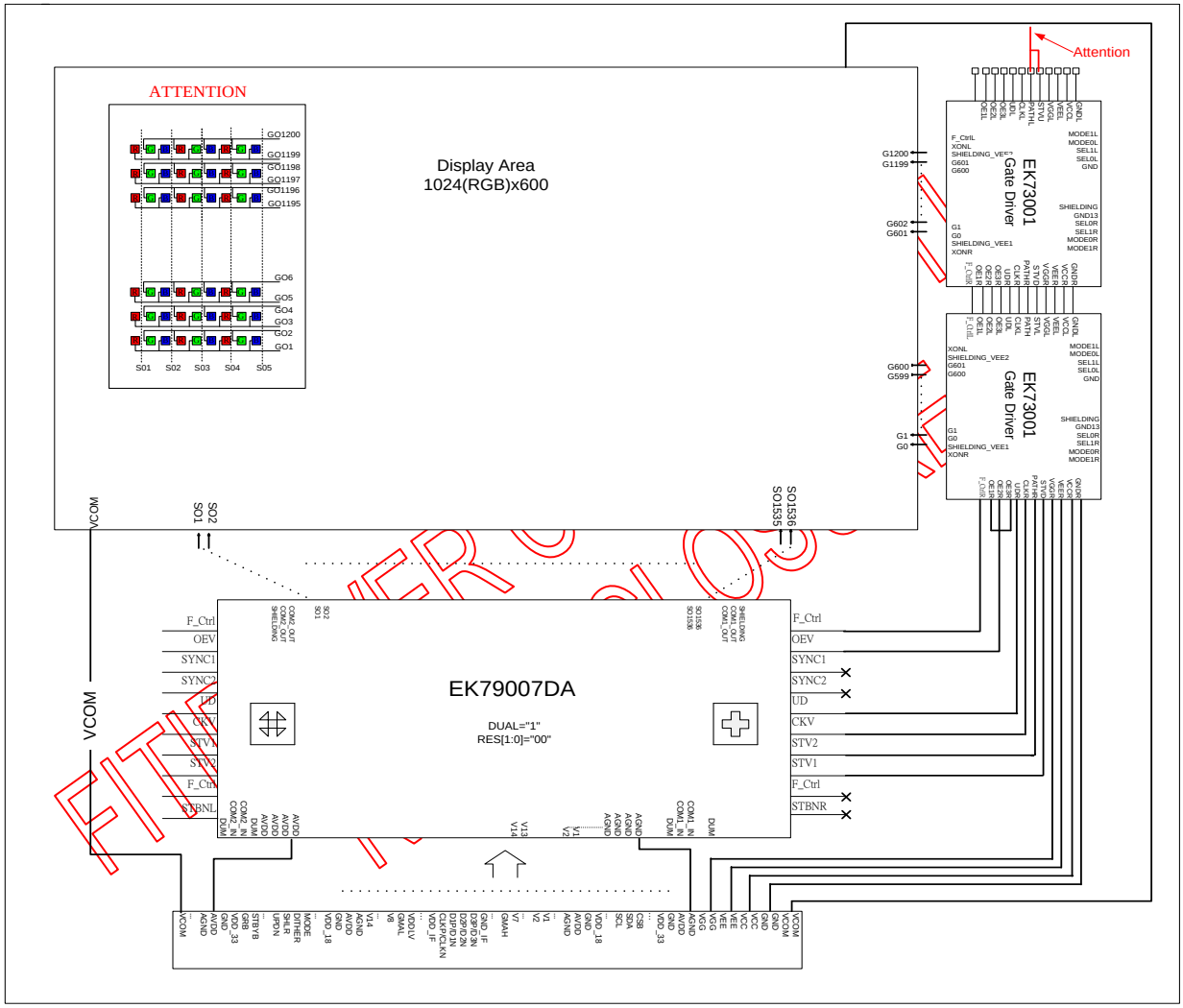

5. PAD SEQUENCE

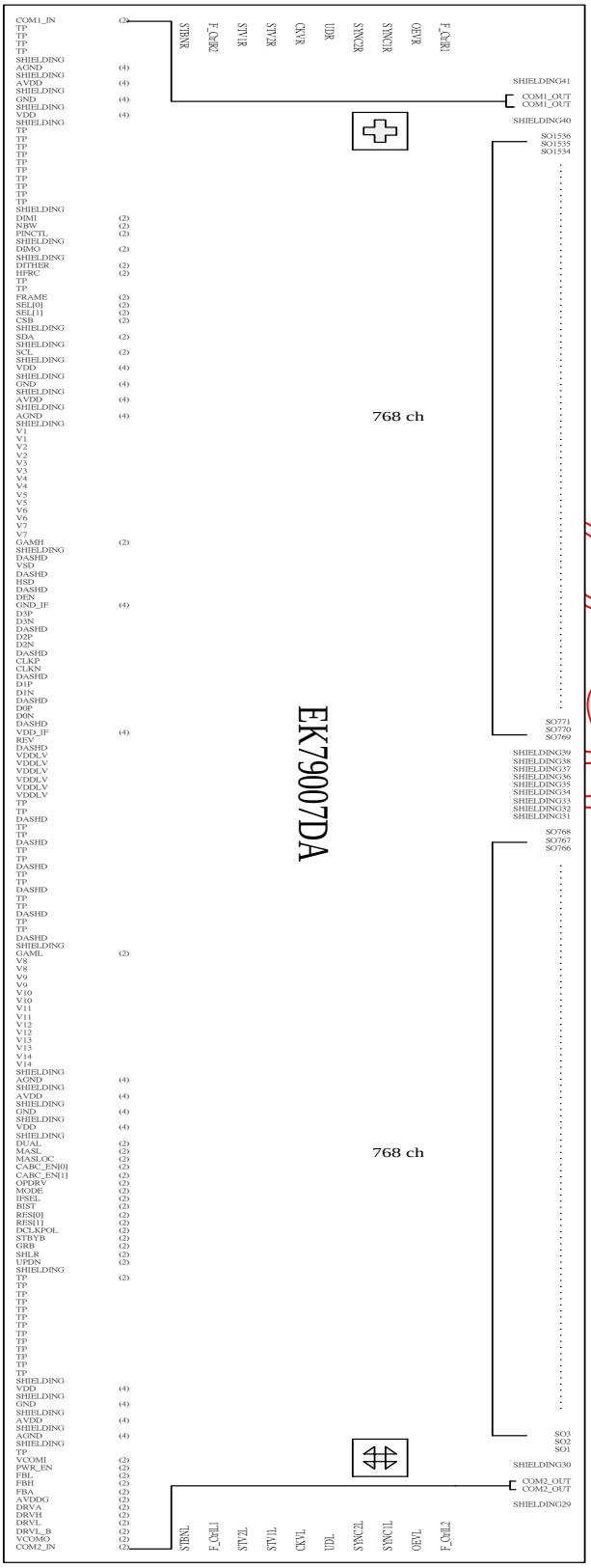

CONFIDENTIAL
DISCLOSURE

6. APPLICATION POWER CIRCUIT

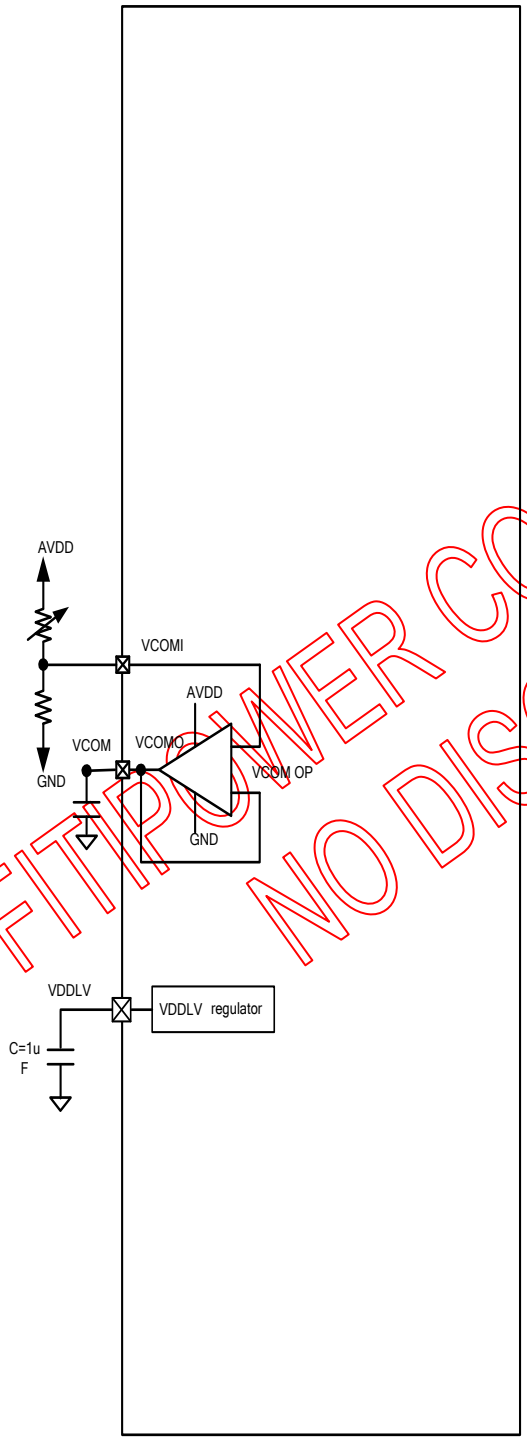

FITIPOWER CONFIDENTIAL
NO DISCLOSURE

7. PIN DESCRIPTION

Pin Name	Pin Type	Description
D0P/D0N D1P/D1N D2P/D2N D3P/D3N	Input	MIPI data input.
CLKP/CLKN	Input	MIPI clock input.
IFSEL	Input	MIPI interface select (please pull GND or floating)
RES[1:0]	Input	RES[1:0]="01",for 1024(RGB)*768 display resolution RES[1:0]="00",for1024(RGB)*600 display resolution (default) RES[1:0]="10",for 800(RGB)*600 display resolution (601~936 channel disable) RES[1:0]="11", for 800(RGB)*480 display resolution (601~936 channel disable)
DITHER	Input	Dithering function enable control. DITHER = "H" , Enable internal dithering function DITHER = "L" , Disable internal dithering function.(default).
HFRC	Input	H-FRC selection. HFRC = "L" : H-FRC disable(default) HFRC = "H" : H-FRC enable If "DITHER"="L" , disable dithering function(HFRC and FRC disable)
DUAL	Input	Dual Gate function enables control. Normally pull high DUAL = "H" , Enable Dual Gate Function. (Default) DUAL = "L" , TBD
V1~V14	Input	When INTERNAL Gamma Table is used. GAMH tied to AVDD , GAML tied to GND and V1~V14 pad are un-used. When using external gamma voltage, GAMH and GAML are floating , and V1~V14 are the external gamma correction points. The voltage of these pins must be: AGND<V14<V13<V12<V11<V10<V9<V8;V7<V6<V5<V4<V3<V2<V1<AVDD .
GAMH	Input	GMAH tied to AVDD
GAML	Input	GMAL tied to GND via resistor.
GRB	Input	Global reset pin. Active Low to enter Reset State. Normally pull high. Connecting with an RC reset circuit for stability.
STBYB	Input	Standby mode. STBYB = "H" ,normal operation(default) STBYB = "L" , timing controller, source driver will turn off, all output are GND.

FITIPOWER CONFIDENTIAL
NO DISCLOSURE

Pin Name	Pin Type	Description
SHLR	Input	Source right or left sequence control. SHLR = ”L“ , shift left: last data = S1←S2←S3……...←S1536 = first data. SHLR = ”H“ , shift right: first data = S1→S2→S3……..→S1536 = last data.(default)
UPDN	Input	Gate up or down scan control. UPDN = ”L” , STV2 output vertical start pulse and UD pin output logica “L” to Gate driver. (default) UPDN = ”H” , STV1 output vertical start pulse and UD pin output logica “H” to Gate driver
BIST	Input	Normal Operation/BIST pattern select. BIST = ”H” : BIST(DCLK input is not needed) BIST = ”L” : Normal Operation(default)
NBW	Input	Normally black or normally white setting. NBW = ”H“ : Normally black NBW = ”L” : Normally white(default)
REV	Input	Controls whether the data of R[7:0]/G[7:0]/B[7:0] are inverted or not, normally pulled low. When REV=”H“ these data will be inverted. EX. “00”→“ 3F”, “07”→“ 38”, “15”→“2A”, and so on.
FRAME	Input	Frame inverse or not select. Normally pull low. FRAME = ”H“ , Uniform FRAME = ”L“ , Frame inverse (Default)
SEL[1:0]	Input	Gate on sequence select. Normally pull low SEL[1] / SEL[0] / Pin control function 1 / 1 / Z+2 1 / 0 / 2 0 / 1 / 2 0 / 0 / Z(default)
OEVR/OEVL	Output	Gate driver control signal
UDR/UDL	Output	Gate driver control signal
CKVR/CKVL	Output	Gate driver control signal
STV1R/STV1L	Output	Gate driver control signal
STV2R/STV2L	Output	Gate driver control signal
STBNR/STBNL	Output	Gate driver control signal
F_CtrlR/F_CtrlL	Output	Gate driver control signal (For special Gate on sequence). In Dual Gate structure , connect this pin to gate driver’s F_Ctrl.
DIMI	Input	Brightness control signal. Normally pull high.
DIMO	Output	Backlight dimmer signal for external controller. DIMO = ”L“ , Turn off external backlight controller DIMO = ”H“ , Logical control signal to turn on external backlight controller NOTE : If CABC OFF , DIMO = DIMI . Else DIMO is controlled by CABC

FITIPOWER CONFIDENTIAL
NO DISCLOSURE

Pin Name	Pin Type	Description
PINCTL	Input	Enable pin control function. (for MIPI) PINCTL="L" , Disable pin control function. The following pin will be inactive: MIPI IF:SHLR, HFRC,DITHER,BIST,NBW,PWR_EN,REV, RES[1:0]. PINCTL="H" , Enable pin control function.(default)
OPDRV	Input	Source OP driving selection. OPDRV = "H" : 133% OPDRV = "L" : normal.(default)
LVBIT	Input	please floating
LVFMT	Input	please floating
AVDD	PI	Power supply for analog circuits
AGND	PI	Ground pins for analog circuits
GND	PI	Ground pins for digital circuits
VDD	PI	Power supply for digital circuits
VDD_IF	PI	MIPI power
GND_IF	PI	MIPI ground
VDDLV	PO	VDDLP LDO output for MIPI LP mode TX use. VDDLP LDO enable on MIPI Interface.
PWR_EN	Input	PWR_EN = "H", enable VCOM buffer PWR_EN = "L", disable VCOM buffer(default)
VCOMI	Input	VCOM buffer in
VCOMO	Output	VCOM buffer out
SO1~SO1536	Output	Source Driver Output Signals All outputs will be of unknown values under stand-by mode.
COM1_IN COM1_OUT	S	Internal link together between input side and output side
COM2_IN COM2_OUT	S	Internal link together between input side and output side.
SHIELDING	SH	Those pins are internally connected to the AGND. DO NOT connect to any WOA on the panel. Data Bus Shielding pad
DASHD	SH	Those pins are internally connected to the GND. RECOMMAND to add shielding lines on the FPC to reduce EMI.
TP1~TP45	T	DO NOT connect to any WOA on the panel and floating on panel.

Note:
P: Power, D: Dummy, S: Shorted line, M: Mark, PI: Power input, PO: Power output,
T: Testing, SH: Shielding, PS: Power Setting, C: Capacitor pin.

Pass Line Description:

Pass Line No.	Pad Name	
1	COM1_IN	COM1_OUT
2	COM2_IN	COM2_OUT

FITIPOWER CONFIDENTIAL
NO DISCLOSURE

7.1. Value of wiring resistance to each pin

The recommended wiring resistance values are shown below. The wiring resistance values affect the current capacity of the power supply, so be sure to design using values that do not exceed those recommended.

Source wiring:

Pin name	Wiring resistance value(Ω)	Pin name	Wiring resistance value(Ω)
AVDD	<5	FRAME	<100
AGND	<5	SEL[1:0]	<100
VDD_IF	<5	REV	<100
VDD	<5	CABC_EN[1:0]	<100
GND_IF	<5	OPDRV	<100
VDDLV	<5	BIST	<100
GND	<5	RES[1:0]	<100
V1~V14	<5	DCLKPOL	<100
DRVX	<5	STBYB	<100
FBX	<5	GRB	<100
VCOMI	<5	SHLR	<100
VCOMO	<5	UPDN	<100
D0P/D0N	<5	PINCTL	<100
D1P/D1N	<5	DUAL(Reserved)	<100
D2P/D2N	<5	MASL(Reserved)	<100
D3P/D3N	<5	MASLOC(Reserved)	<100
CLKP/CLKN	<5	MODE(Reserved)	<100
DIMI	<100	LVFMT	<100
DIMO	<100	LVBIT	<100
NBW	<100	DEN(Reserved)	<100
PINCTL	<100		
DITHER	<100		
IFSEL	<100		
HFRC	<100		

Gate wiring:

Pin name	Wiring resistance value(Ω)	Pin name	Wiring resistance value(Ω)
VGH	<50	OEVX	<100
VGL	<30	UDX	<100
VCC	<50	CKVX	<100
GND	<40	STBNX	<100
STV1X/STV2X	<100	F_CtrlX	<100

FITIPOWER CONFIDENTIAL
NO DISCLOSURE

8. MIPI INTERFACE (MOBILE INDUSTRY PROCESSING INTERFACE)

The Display Serial Interface standard defines protocols between a host processor and peripheral devices that adhere to MIPI Alliance standards for mobile device interfaces. The DSI standard builds on existing standards by adopting pixel formats and command set defined in MIPI Alliance standards.

DSI-compliant peripherals support either of two basic modes of operation: Command Mode and Video Mode. Which mode is used depends on the architecture and capabilities of the peripheral. The mode definitions reflect the primary intended use of DSI for display interconnect, but are not intended to restrict DSI from operating in other applications.

Command Mode refers to operation in which transactions primarily take the form of sending commands and data to a peripheral, such as a display module, that incorporates a display controller. The display controller may include local registers. Systems using Command Mode write to, and read from, the registers. The host processor indirectly controls activity at the peripheral by sending commands, parameters and data to the display controller. The host processor can also read display module status information. Command Mode operation requires a bidirectional interface.

Video Mode refers to operation in which transfers from the host processor to the peripheral take the form of a real-time pixel stream. In normal operation, the display module relies on the host processor to provide image data at sufficient bandwidth to avoid flicker or other visible artifacts in the displayed image. Video information should only be transmitted using High Speed Mode. To reduce complexity and cost, systems that only operate in Video Mode may use a unidirectional data path.

MIPI Lane Configuration:

	MCU (Master) Display Module (Slave)
Clock Lane	Unidirectional Lane • Clock Only • Escape Mode(ULPS Only)
Data Lane0	Bi-directional Lane ● Forward High-Speed ● Bi-directional Escape Mode ● Bi-directional LPDT
Data Lane1	Unidirectional ● Forward High speed
Data Lane2	Unidirectional ● Forward High speed
Data Lane3	Unidirectional ● Forward High speed

FITIPOWER CONFIDENTIAL
NO DISCLOSURE

8.1. Display Module Pin Configuration for DSI

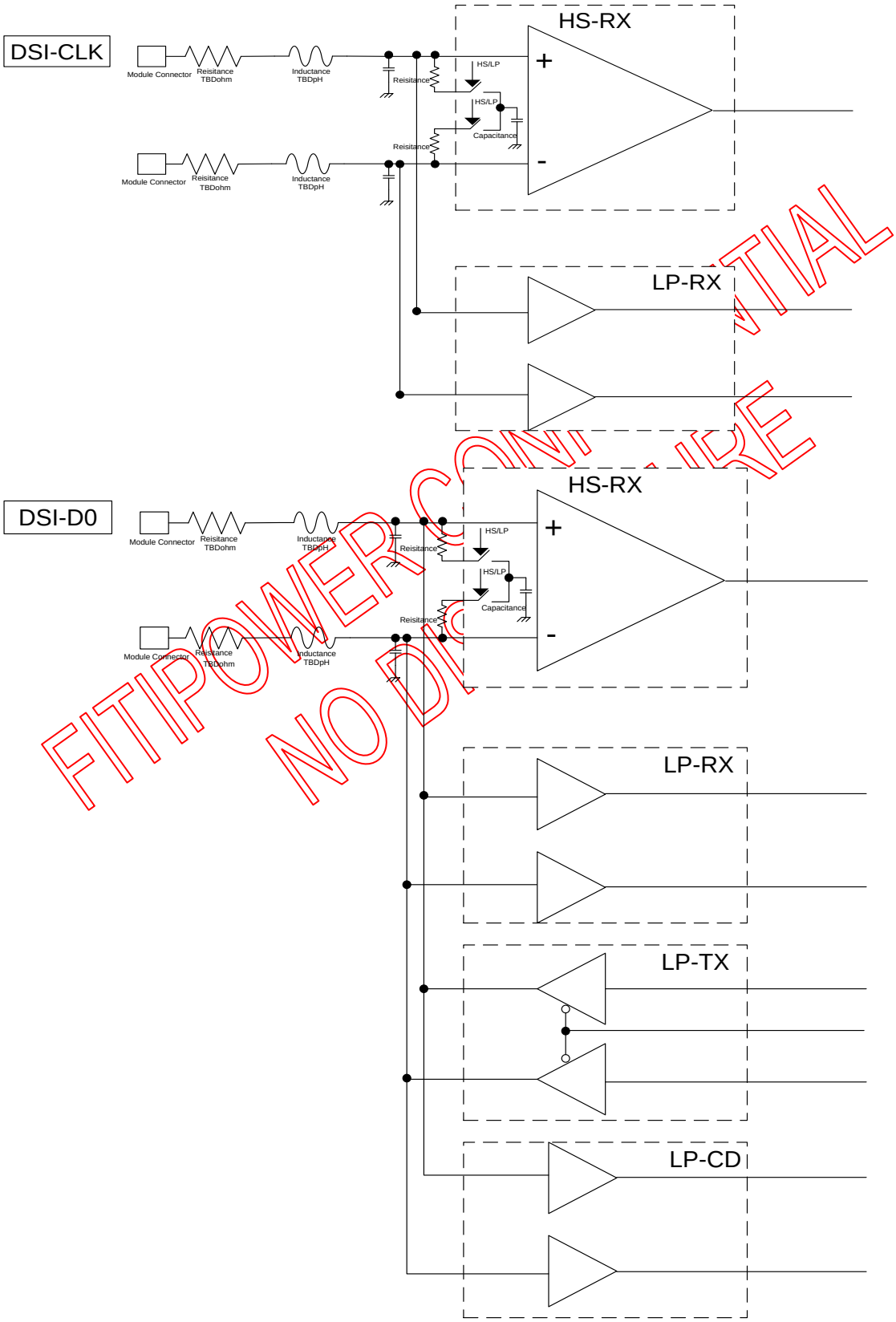

FITIPOWER CONFIDENTIAL
NO DISCLOSURE

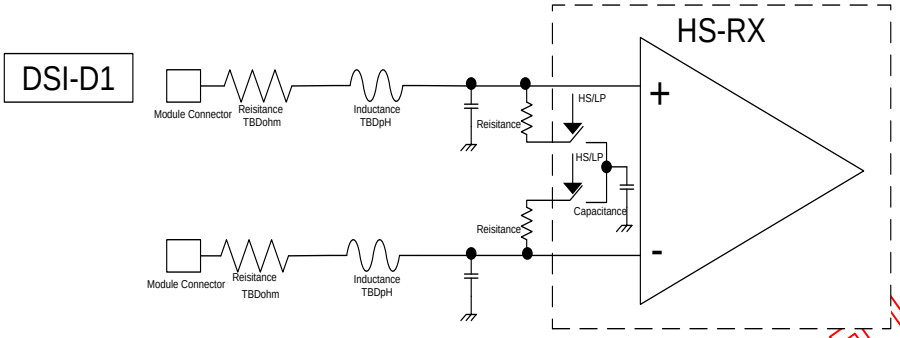

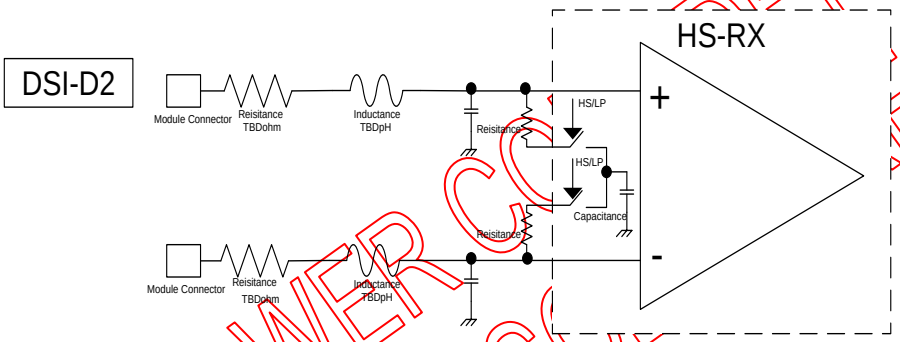

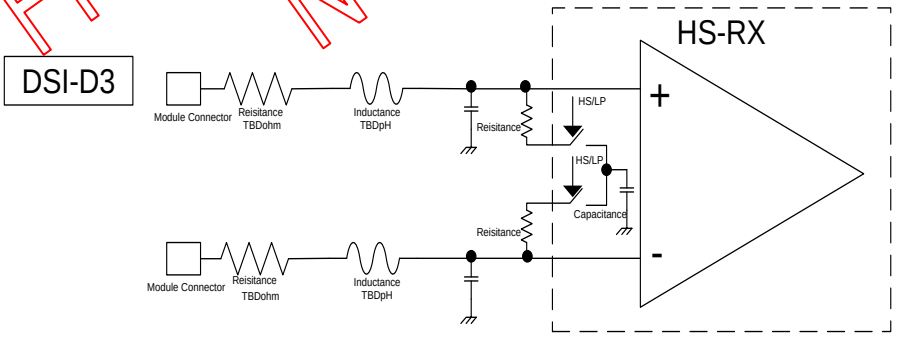

FITIPOWER CONFIDENTIAL
NO DISCLOSURE

8.2. Display Serial Interface (DSI)

8.2.1. Video Mode Communication

Video Mode peripherals require pixel data delivered in real time. This section specifies the format and timing of DSI traffic for this type of display module.

Transmission Packet Sequences

DSI supports several formats, or packet sequences, for Video Mode data transmission. The peripheral's timing requirements dictate which format is appropriate. These terms are used throughout the following sections:

- Non-Burst Mode with Sync Pulses – enables the peripheral to accurately reconstruct original video timing, including sync pulse widths.
- Non-Burst Mode with Sync Events – similar to above, but accurate reconstruction of sync pulse widths is not required, so a single Sync Event is substituted.
- Burst mode – RGB pixel packets are time-compressed, leaving more time during a scan line for LP mode(saving power) or for multiplexing other transmissions onto the DSI link.

In the following figures the Blanking or Low-Power Interval (BLLP) is defined as a period during which video packets such as pixel-stream and sync event packets are not actively transmitted to the peripheral. To enable PHY synchronization the host processor should periodically end HS transmission and drive the Data Lanes to the LP state. This transition should take place at least once per frame; shown as LPM in the figures in this section. It is recommended to return to LP state once per scanline during the horizontal blanking time. Regardless of the frequency of BLLP periods, the host processor is responsible for meeting all documented peripheral timing requirements. Note, at lower frequencies BLLP periods will approach, or become, zero.

During the BLLP the DSI Link may do any of the following:

- Remain in Idle Mode with the host processor in LP-11 state and the peripheral in LP-RX.
- Transmit one or more non-video packets from the host processor to the peripheral using Escape Mode.
- Transmit one or more non-video packets from the host processor to the peripheral using HS Mode.
- If the previous processor-to-peripheral transmission ended with BTA, transmit one or more packets from the peripheral to the host processor using Escape Mode.
- Transmit one or more packets from the host processor to a different peripheral using a different Virtual Channel ID.

The sequence of packets within the BLLP or RGB portion of a HS transmission is arbitrary. The host processor may compose any sequence of packets, including iterations, within the limits of the packet format definitions. For all timing cases, the first line of a frame shall start with VS; all other lines shall start with HS. This is also true in the special case when VSA+VBP=0. Note that the position of synchronization packets, such as VS and HS, in time is of utmost importance since this has a direct impact on the visual performance of the display panel.

Normally, RGB pixel data is sent with one full scan line of pixels in a single packet. Individual pixels shall not be split across packets.

FITIPOWER CONFIDENTIAL
NO DISCLOSURE

Transmission packet components used in the figures in this section are defined in Figure below unless otherwise specified.

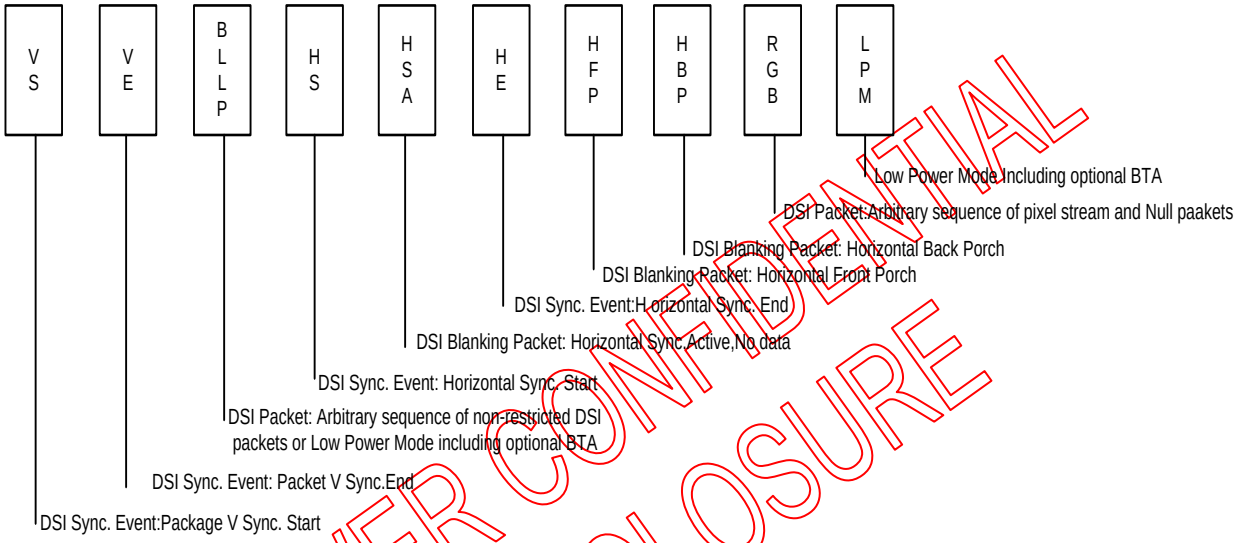

DSI Video Mode Interface Timing Legend

If a peripheral timing specification for HBP or HFP minimum period is zero, the corresponding Blanking Packet may be omitted. If the HBP or HFP maximum period is zero, the corresponding blanking packet shall be omitted.

Clock Requirements

A DSI host processor shall support continuous clock on the Clock Lane for display module that require it, so the host processor needs to keep the HS serial clock running.

FITIPOWER CONFIDENTIAL
NO DISCLOSURE

●Non-Burst Mode with Sync Pulses

With this format, the goal is to accurately convey DPI-type timing over the DSI serial Link. This includes matching DPI pixel-transmission rates, and widths of timing events like sync pulses. Accordingly, synchronization periods are defined using packets transmitting both start and end of sync pulses. An example of this mode is shown in Figure below.

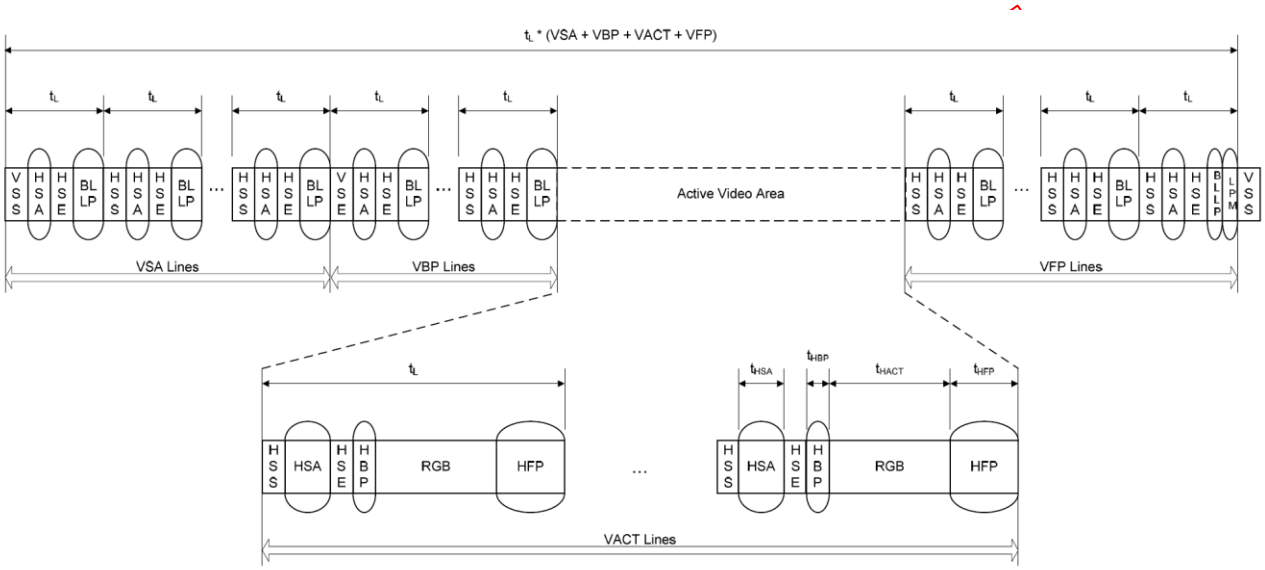

Normally, periods shown as I (Horizontal Sync Active), HBP (Horizontal Back Porch) and HFP (Horizontal Front Porch) are filled by Blanking Packets, with lengths (including packet overhead) calculated to match the period specified by the peripheral's data sheet. Alternatively, if there is sufficient time to transition from HS to LP mode and back again, a timed interval in LP mode may substitute for a Blanking Packet, thus saving power.

●**Non-Burst Mode with Sync Events**

This mode is a simplification of the format described in section “Non-Burst Mode with Sync Pulse” .Only the start of each synchronization pulse is transmitted. The peripheral may regenerate sync pulses as needed from each Sync Event packet received. Pixels are transmitted at the same rate as they would in a corresponding parallel display interface such as DPI-2. An example of this mode is shown in Figure below.

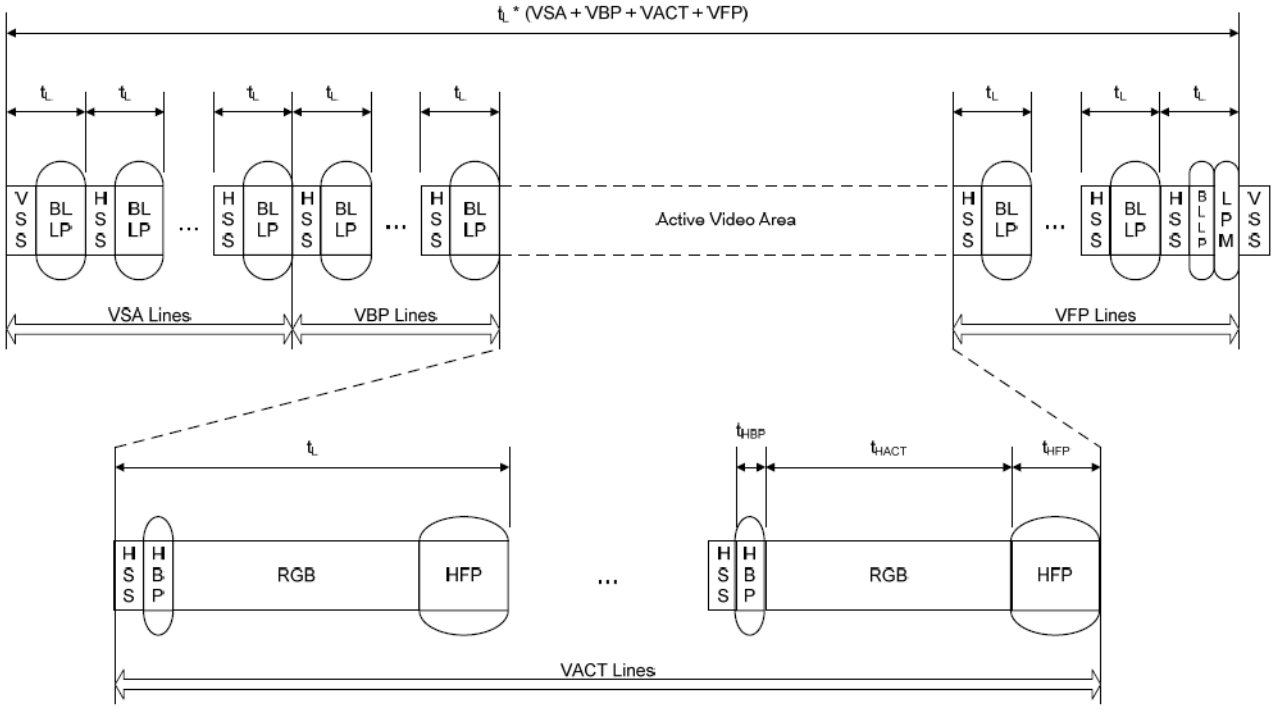

As with the previous Non-Burst Mode, if there is sufficient time to transition from HS to LP mode and back again, a timed interval in LP mode may substitute for a Blanking Packet, thus saving power.

- **Burst Mode**

In this mode, blocks of pixel data can be transferred in a shorter time using a time-compressed burst format. This is a good strategy to reduce overall DSI power consumption, as well as enabling larger blocks of time for other data transmissions over the Link in either direction. There may be a line buffer or similar memory on the peripheral to accommodate incoming data at high speed. Following HS pixel data transmission, the bus goes to Low Power Mode, during which it may remain idle, i.e. the host processor remains in LP-11 state, or LP transmission may take place in either direction. If the peripheral takes control of the bus for sending data to the host processor, its transmission time shall be limited to ensure data underflow does not occur from its internal buffer memory to the display device. An example of this mode is shown in Figure below.

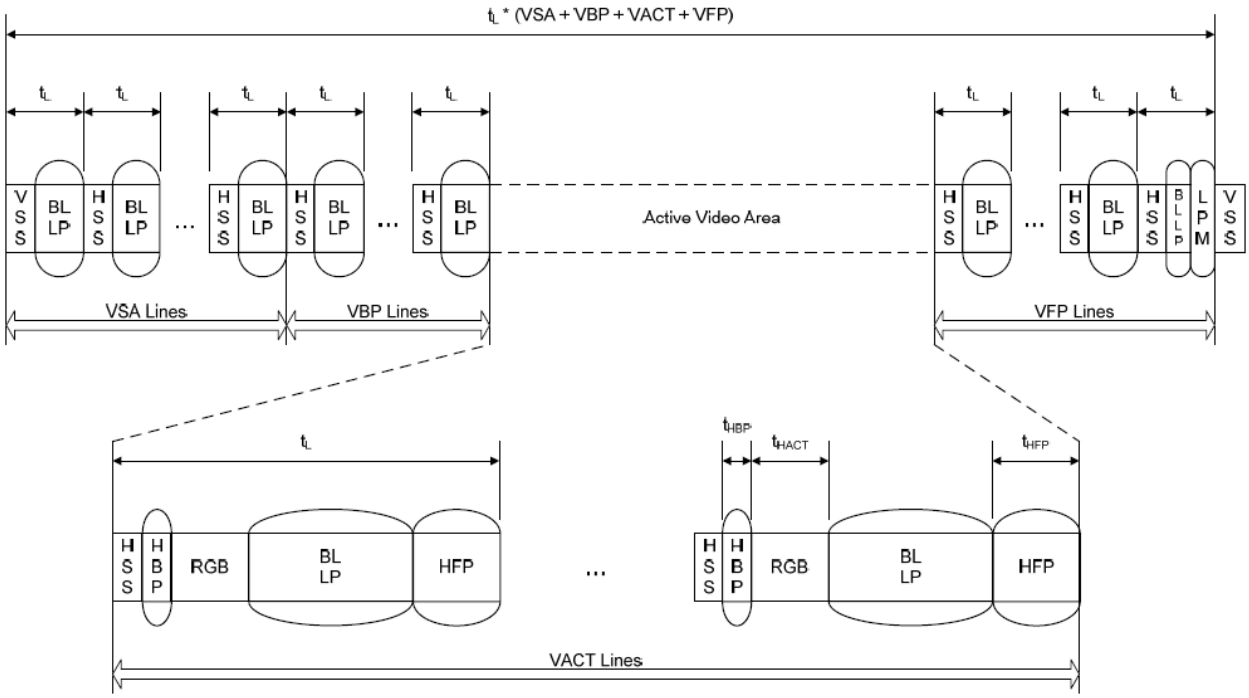

Similar to the Non-Burst Mode scenario, if there is sufficient time to transition from HS to LP mode and back again, a timed interval in LP mode may substitute for a Blanking Packet, thus saving power.

9. COMMAND DESCRIPTION

9.1. MIPI Control Register

Following table list all the MIPI control registers and bit name definition for EK79007AD. Refer to the next section for detail register function description, please.

Setting of all the MIPI registers will take effect at the coming valid Vsync signal except GRB bit.

All the MIPI control registers and bit name definition:

	Register address									MSB							LSB	default (hex)
No.	A7	A6	A5	A4	A3	A2	A1	A0	R/W	D7	D6	D5	D4	D3	D2	DI	DO	_
R00h	0	0	0	0	0	0	0	0	0	NOP								_
R01h	0	0	0	0	0	0	0	1	0	GRB								_
R05h	0	0	0	0	0	0	0	1	0	RDNUMED(TBD)								_
R0Ah	0	0	0	0	1	0	1	0	1	GET_POWER_Mode								_
R0Dh	0	0	0	0	1	1	0	1	1	GET_DISPLAY_Mode								_
R0Eh	0	0	0	0	1	1	1	0	1	GET_SIGNAL_Mode(TBD)								_
R0Fh	0	0	0	0	1	1	1	1	1	RDDSDR(TBD)								_
R10h	0	0	0	1	0	0	0	0	0	ENTER_SLEEP_MODE								_
R11h	0	0	0	1	0	0	0	1	0	EXIT_SLEEP_MODE								_
R20h	0	0	1	0	0	0	0	0	0	EXIT_INVERT_MODE								_
R21h	0	0	1	0	0	0	0	1	0	ENTER_INVERT_MODE								_
R36h	0	0	1	1	0	1	1	0	1/0	0	0	0	0	0	0	UPDN(0)	SHLR(1)	01
R80h	1	0	0	0	0	0	0	0	1/0	G2R[3:0] (1000)				G1R[3:0] (1000)				88
R81h	1	0	0	0	0	0	0	1	1/0	G4R[3:0] (1000)				G3R[3:0] (1000)				88
R82h	1	0	0	0	0	0	1	0	1/0	G6R[3:0] (1000)				G5R[3:0] (1000)				88
R83h	1	0	0	0	0	0	1	1	1/0	G8R[3:0] (1000)				G7R[3:0] (1000)				88
R84h	1	0	0	0	0	1	0	0	1/0	G10R[3:0] (1000)				G9R[3:0] (1000)				88
R85h	1	0	0	0	0	1	0	1	1/0	G12R[3:0] (1000)				G11R[3:0] (1000)				88
R86h	1	0	0	0	0	1	1	0	1/0	G14R[3:0] (1000)				G13R[3:0] (1000)				88
RB0h	1	0	1	1	0	0	0	0	1/0	PWR_EN(0)	–	–	–	–	–	–	–	00
RB1h	1	0	1	1	0	0	0	1	1/0			HFRC(0)	DITHER(0)	BIST(0)	RES[1:0] (00)		–	00
RB2h	1	0	1	1	0	0	1	0	1/0	–	NBW(0)	En_3lane(0)	En_2lane(0)	–	–	–	–	00
RB3h	1	0	1	1	0	0	1	1	1/0	–	–	–	–	–	FRAME(0)	SEL[1:0]		00

FITIPOWER CONFIDENTIAL NO DISCLOSURE

R00h: NOP (No Operation)

Address (MIPI I/F)	00h					Access Attribute			W
						Number of Parameter(s)			0
Parameter	D[7]	D[6]	D[5]	D[4]	D[3]	D[2]	D[1]	D[0]	Default Value
	No Argument								N/A
Description	This command performs no operation and is ignored by the device.								

R01h: GRB (Software Reset)

Address (MIPI I/F)	01h					Access Attribute			W
						Number of Parameter(s)			0
Parameter	D[7]	D[6]	D[5]	D[4]	D[3]	D[2]	D[1]	D[0]	Default Value
	No Argument								N/A
Description	When the Software Reset command is written, it causes a software reset. It resets the commands and parameters to their S/W Reset register values and all source are set to GND (display off).								
Restriction	(1)It will be necessary to wait 20 msec before sending new command following software reset. (2)The display module loads all display supplier's factory default values to the registers during 5 msec.								

R05h: RDNUMED (reserved)

R0Ah: GET_POWER_MODE (Read Display Power Mode)

Address (MIPI I/F)	0Ah					Access Attribute			R
						Number of Parameter(s)			1
Parameter	D[7]	D[6]	D[5]	D[4]	D[3]	D[2]	D[1]	D[0]	Default Value
	D7	D6	D5	D4	D3	D2	D1	D0	00h
Description	D[4]:Sleep In/Out "0" =Sleep Out, "1" =Sleep In								

R0Dh: GET_DISPLAY_MODE (Read the Current Display Mode)

Address (MIPI I/F)	0Dh					Access Attribute			R
						Number of Parameter(s)			1
Parameter	D[7]	D[6]	D[5]	D[4]	D[3]	D[2]	D[1]	D[0]	Default Value
	D7	D6	D5	D4	D3	D2	D1	D0	00h
Description	D[5]:Inversion On/Off "0" =Inversion off, "1" =Inversion on								

FITIPOWER CONFIDENTIAL
NO DISCLOSURE

R0Eh: GET_SIGNAL_MODE (TBD)

Address (MIPI I/F)	0Fh					Access Attribute			R
						Number of Parameter(s)			1
Parameter	D[7]	D[6]	D[5]	D[4]	D[3]	D[2]	D[1]	D[0]	Default Value
	No Argument								00h
Description	D[0]:Error on DSI ”1“ :error, ”0“ =no error								
Restriction	-								

R0Fh:RDDSDR (Read Display Self-Diagnostic Result)(TBD)

R10h: ENTER_SLEEP_MODE (Enter the Sleep-In Mode)

Address (MIPI I/F)	10h					Access Attribute			W
						Number of Parameter(s)			0
Parameter	D[7]	D[6]	D[5]	D[4]	D[3]	D[2]	D[1]	D[0]	Default Value
	No Argument								Sleep In
Description	This command initiates the power-down sequence. The Sleep In profile will be executed when this command is received.								
Restriction	This command has no effect when the display module is already in Sleep Mode.								

R11h: EXIT_SLEEP_MODE (Exit the Sleep-In Mode)

Address (MIPI I/F)	11h					Access Attribute			W
						Number of Parameter(s)			0
Parameter	D[7]	D[6]	D[5]	D[4]	D[3]	D[2]	D[1]	D[0]	Default Value
	No Argument								Sleep In
Description	This command initiates the power-up sequence. The Sleep Out will load register value. It will be necessary to wait 5 msec before sending next command.								
Restriction	This command will not cause any visible effect on the display when the display is not in Sleep.								

R20h:EXIT_INVERT_MODE (Display Inversion Off)

Address (MIPI I/F)	20h					Access Attribute			W
						Number of Parameter(s)			0
Parameter	D[7]	D[6]	D[5]	D[4]	D[3]	D[2]	D[1]	D[0]	Default Value
	No Argument								Inversion Off
Description	This command is used to recover from display reverse mode and does not change any other status.								
Restriction	This command has no effect when the module is already in inversion off mode.								

FITIPOWER CONFIDENTIAL
NOT DISCLOSURE

R21h: ENTER_INVERT_MODE (Display Inversion On)

Address (MIPI I/F)	21h					Access Attribute			W
						Number of Parameter(s)			0
Parameter	D[7]	D[6]	D[5]	D[4]	D[3]	D[2]	D[1]	D[0]	Default value
	No Argument								Inversion Off
Description	This command is used to enter display Inversion mode and does not change any other status. To exit from Display Inversion on, the Display Inversion off command (20h) should be written.								
Restriction	This command has no effect when the module is already in inversion on mode.								

R36h: SET_ADDRESS_MODE (Data Access Control)

Address (MIPI I/F)	36h					Access Attribute			R/W
						Number of Parameter(s)			1
Parameter	D[7]	D[6]	D[5]	D[4]	D[3]	D[2]	D[1]	D[0]	Default Value
	0	0	0	0	0	0	UPDN	SHLR	01h
Description	UPDN: Gate up or down scan control. UPDN = "0" , STV2 output vertical start pulse and UD pin output logical "0" to Gate driver.(default) UPDN = "1" , STV1 output vertical start pulse and UD pin output logical "1" to Gate driver. SHLR: Source right or left sequence control. SHLR = "0" , shift left: last data = S1←S2←S3……..←S1200 = first data. SHLR = "1" , shift right: first data = S1→S2→S3……..→S1200 = last data. (default)								

R80h: Gamma Control Register

Address (MIPI I/F)	80h					Access Attribute			R/W
						Number of Parameter(s)			1
Parameter	D[7]	D[6]	D[5]	D[4]	D[3]	D[2]	D[1]	D[0]	Default Value
	G2R				G1R				88h
Description	Gamma voltage setting.								

R81h: Gamma Control Register

Address (MIPI I/F)	81h					Access Attribute			R/W
						Number of Parameter(s)			1
Parameter	D[7]	D[6]	D[5]	D[4]	D[3]	D[2]	D[1]	D[0]	Default Value
	G4R				G3R				88h
Description	Gamma voltage setting.								

FITIPOWER CONFIDENTIAL
NO DISCLOSURE

R82h: Gamma Control Register

Address (MIPI I/F)	82h					Access Attribute			R/W
						Number of Parameter(s)			1
Parameter	D[7]	D[6]	D[5]	D[4]	D[3]	D[2]	D[1]	D[0]	Default Value
	G6R				G5R				88h
Description	Gamma voltage setting.								

R83h: Gamma Control Register

Address (MIPI I/F)	83h					Access Attribute			R/W
						Number of Parameter(s)			1
Parameter	D[7]	D[6]	D[5]	D[4]	D[3]	D[2]	D[1]	D[0]	Default Value
	G8R				G7R				88h
Description	Gamma voltage setting.								

R84h: Gamma Control Register

Address (MIPI I/F)	84h					Access Attribute			R/W
						Number of Parameter(s)			1
Parameter	D[7]	D[6]	D[5]	D[4]	D[3]	D[2]	D[1]	D[0]	Default Value
	G10R				G9R				88h
Description	Gamma voltage setting.								

R85h: Gamma Control Register

Address (MIPI I/F)	85h					Access Attribute			R/W
						Number of Parameter(s)			1
Parameter	D[7]	D[6]	D[5]	D[4]	D[3]	D[2]	D[1]	D[0]	Default Value
	G12R				G11R				88h
Description	Gamma voltage setting.								

R86h: Gamma Control Register

Address (MIPI I/F)	86h					Access Attribute			R/W
						Number of Parameter(s)			1
Parameter	D[7]	D[6]	D[5]	D[4]	D[3]	D[2]	D[1]	D[0]	Default Value
	G14R				G13R				88h
Description	Gamma voltage setting.								

FITIPOWER CONFIDENTIAL
NOT TO DISCLOSURE

RB0h: Panel Control Register

Address (MIPI I/F)	B0h					Access Attribute			R/W
						Number of Parameter(s)			1
Parameter	D[7]	D[6]	D[5]	D[4]	D[3]	D[2]	D[1]	D[0]	Default Value
	PWR_EN (0)	–	–	–	–	–	–	–	00h
Description	PWR_EN: POWER enable. PWR_EN = ”1“ , enable VCOM buffer PWR_EN = ”0“ , disable VCOM buffer (Default)								

RB1h: Panel Control Register

Address (MIPI I/F)	B1h					Access Attribute			R/W
						Number of Parameter(s)			1
Parameter	D[7]	D[6]	D[5]	D[4]	D[3]	D[2]	D[1]	D[0]	Default Value
			HFRC (0)	DITHER (0)	BIST (0)	RES[1:0] (00)		–	00h
Description	HFRC: H-FRC selection. HFRC = ”1“ : H-FRC enable HFRC = ”0“ : H-FRC disable (Default) If DITHER=”0“ ,disable dithering function(H-FRC and FRC disable) DITHER: Dithering function enable control. DITHER = ”1“ , Enable internal dithering function DITHER = ”0“ , Disable internal dithering function (Default) BIST: Normal Operation/BIST pattern select. BIST = ”1“ : BIST(DCLK input is not needed) BIST = ”0“ : Normal Operation (Default) RES[1:0]: = ”01“ , for 1024(RGB)*768 display resolution = ”00“ , for 1024(RGB)*600 display resolution (default) = ”10“ , for 800(RGB)*600 display resolution (601~936 channel disable) = ”11“ , for 800(RGB)*480 display resolution (601~936 channel disable)								

FITIPOWER CONFIDENTIAL
NO DISCLOSURE

RB2h: Panel Control Register

Address (MIPI I/F)	B2h				Access Attribute				R/W
					Number of Parameter(s)				1
Parameter	D[7]	D[6]	D[5]	D[4]	D[3]	D[2]	D[1]	D[0]	Default Value
	—	NBW(0)	En_3lane(0)	En_2lane(0)	—	—	—	—	00h
Description	NBW: Normally black or normally white setting. NBW="1 ": Normally black. NBW="0" : Normally white(default). En_3lane: Enable or disable 3 lane MIPI interface En_3lane = "1" : Enable 3 lane MIPI interface En_3lane = "0" : Disable 3 lane MIPI interface(Default) En_2lane: Enable or disable 2 lane MIPI interface En_2lane = "1" : Enable 2 lane MIPI interface En_2lane = "0" : Disable 2 lane MIPI interface(Default) Note: If En_3lane and En_2lane = "1" simultaneously, the interface would be MIPI 4 lane.								

RB3h: Panel Control Register

Address (MIPI I/F)	B2h					Access Attribute			R/W
						Number of Parameter(s)			1
Parameter	D[7]	D[6]	D[5]	D[4]	D[3]	D[2]	D[1]	D[0]	Default Value
	—	—	—	—	—	FRAME (0)	SEL[1:0] (00)		00h
Description	FRAME: Frame inverse or not select. FRAME = "1" , Uniform FRAME = "0" , Frame inverse(Default) SEL[1:0]:Gate on sequence select.								

SEL[1]	SEL[0]	Pin control function
1	1	Z+2
1	0	2
0	1	2
0	0	Z(default)

FITIPOWER CONFIDENTIAL
NO DISCLOSURE

10. FUNCTION DESCRIPTION

10.1. Power On/Off Sequence

In order to prevent IC from power on reset fail, the rising time (TPOR) of the digital power supply VDD should be maintained within the given specifications. Refer to “AC Characteristics” for more detail on timing.

10.1.1. Power On/Off Sequence

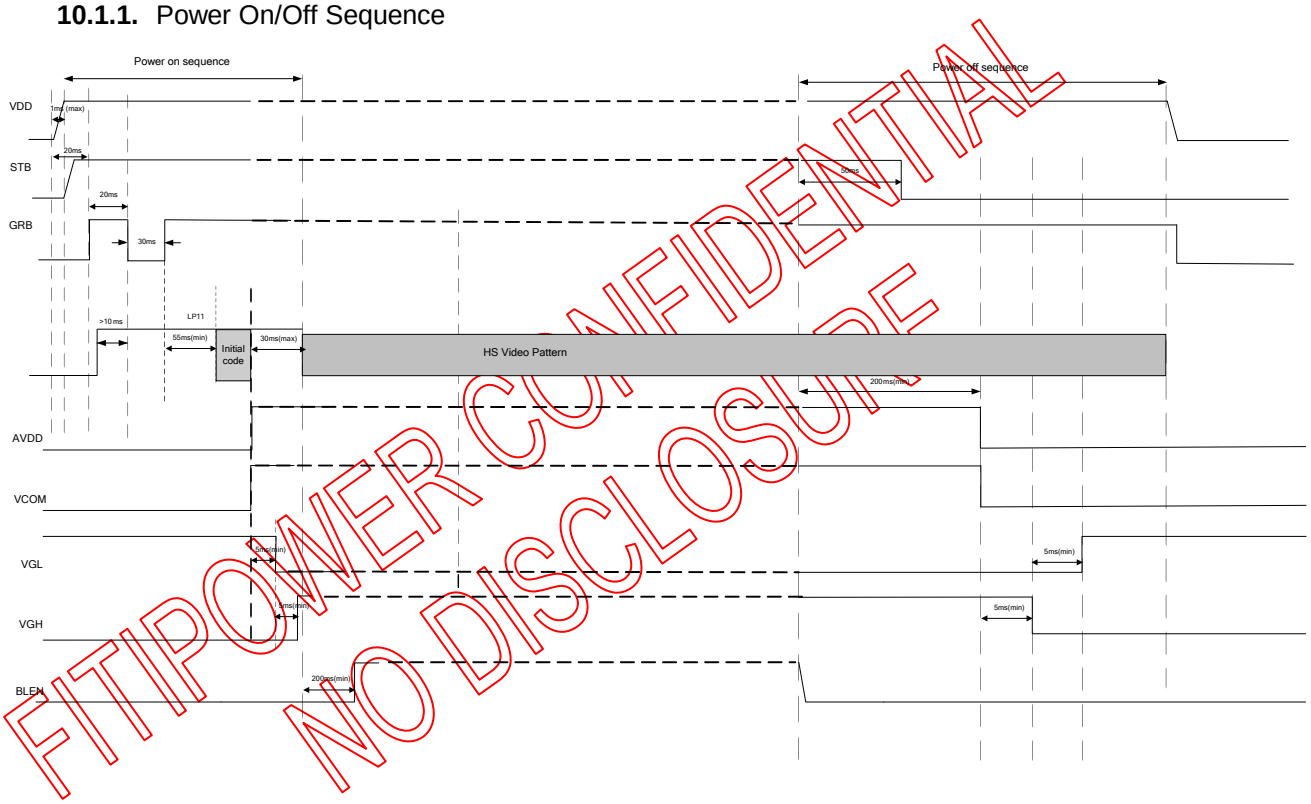

FITIPOWER CONFIDENTIAL
NO DISCLOSURE

Note: CLK and Data Lanes should keep in LP11(stop state) before GRB.

10.2. Input Data VS Output Voltage

The figure below shows the relationship between the input data and the output voltage. Refer to the following pages for the relative resistor values and voltage calculation method.

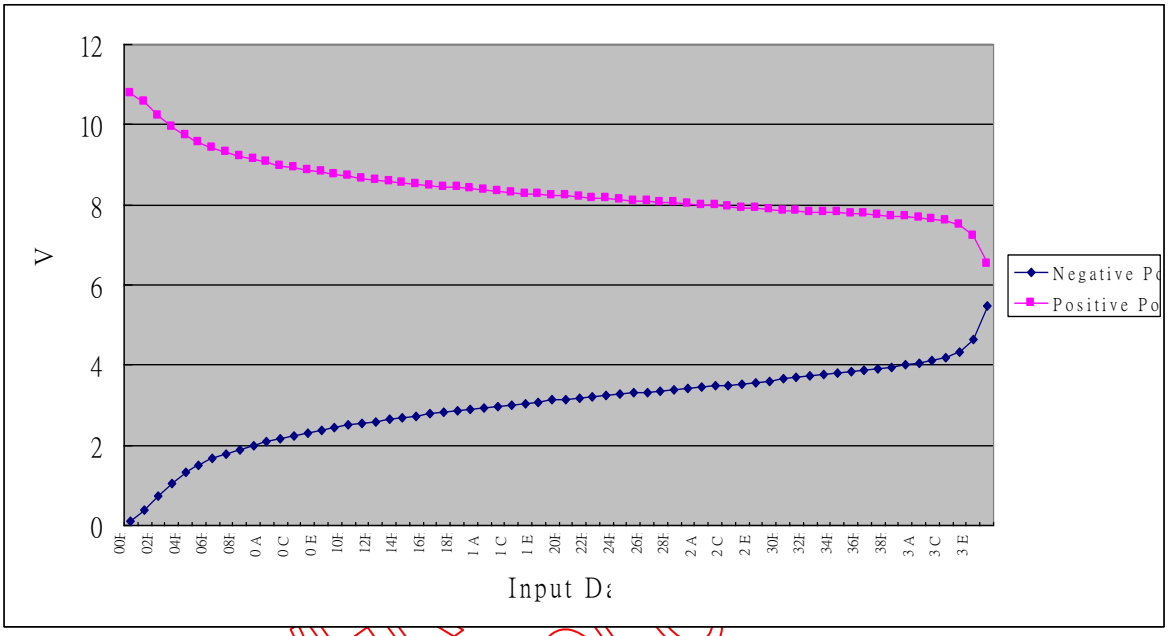

Remark: AVDD-0.1 > V1 > V2> V3 > V4 > V5 > V6 > V7; V8 > V9 > V10 > V11 > V12 > V13 > V14 > AGND+0.1V

FITIPOWER
NO DISCLO

10.3. Input Data and Output Voltage Reference Table

Input Data and Output Voltage Reference Table

@AVDD=11V

V1	V2	V3	V4	V5	V6	V7	V8	V9	V10	V11	V12	V13	V14	Unit
10.78	10.569	8.708	8.213	7.866	7.243	6.51	5.49	4.63	3.653	3.146	2.493	0.373	0.11	V

Data	Positive
00H	AVDD×0.980
01H	AVDD×0.961
02H	AVDD×0.930
03H	AVDD×0.905
04H	AVDD×0.885
05H	AVDD×0.870
06H	AVDD×0.857
07H	AVDD×0.847
08H	AVDD×0.838
09H	AVDD×0.830
0AH	AVDD×0.823
0BH	AVDD×0.816
0CH	AVDD×0.811
0DH	AVDD×0.806
0EH	AVDD×0.801
0FH	AVDD×0.796
10H	AVDD×0.792
11H	AVDD×0.788
12H	AVDD×0.784
13H	AVDD×0.781
14H	AVDD×0.778
15H	AVDD×0.775
16H	AVDD×0.772
17H	AVDD×0.769
18H	AVDD×0.766
19H	AVDD×0.763
1AH	AVDD×0.761
1BH	AVDD×0.758
1CH	AVDD×0.756
1DH	AVDD×0.753
1EH	AVDD×0.751
1FH	AVDD×0.748

Data	Positive
20H	AVDD×0.747
21H	AVDD×0.745
22H	AVDD×0.743
23H	AVDD×0.741
24H	AVDD×0.739
25H	AVDD×0.737
26H	AVDD×0.735
27H	AVDD×0.732
28H	AVDD×0.731
29H	AVDD×0.729
2AH	AVDD×0.727
2BH	AVDD×0.725
2CH	AVDD×0.723
2DH	AVDD×0.721
2EH	AVDD×0.719
2FH	AVDD×0.717
30H	AVDD×0.715
31H	AVDD×0.713
32H	AVDD×0.711
33H	AVDD×0.710
34H	AVDD×0.709
35H	AVDD×0.707
36H	AVDD×0.706
37H	AVDD×0.704
38H	AVDD×0.702
39H	AVDD×0.700
3AH	AVDD×0.697
3BH	AVDD×0.694
3CH	AVDD×0.690
3DH	AVDD×0.681
3EH	AVDD×0.658
3FH	AVDD×0.592

FITIPOWER CONFIDENTIAL
NO DISCLOSURE

Data	Negative
00H	AVDD×0.010
01H	AVDD×0.034
02H	AVDD×0.068
03H	AVDD×0.096
04H	AVDD×0.119
05H	AVDD×0.136
06H	AVDD×0.151
07H	AVDD×0.162
08H	AVDD×0.172
09H	AVDD×0.182
0AH	AVDD×0.189
0BH	AVDD×0.197
0CH	AVDD×0.204
0DH	AVDD×0.210
0EH	AVDD×0.215
0FH	AVDD×0.221
10H	AVDD×0.227
11H	AVDD×0.231
12H	AVDD×0.236
13H	AVDD×0.240
14H	AVDD×0.245
15H	AVDD×0.248
16H	AVDD×0.253
17H	AVDD×0.256
18H	AVDD×0.260
19H	AVDD×0.263
1AH	AVDD×0.266
1BH	AVDD×0.270
1CH	AVDD×0.273
1DH	AVDD×0.277
1EH	AVDD×0.280
1FH	AVDD×0.284

Data	Negative
20H	AVDD×0.286
21H	AVDD×0.289
22H	AVDD×0.292
23H	AVDD×0.294
24H	AVDD×0.297
25H	AVDD×0.300
26H	AVDD×0.302
27H	AVDD×0.305
28H	AVDD×0.308
29H	AVDD×0.311
2AH	AVDD×0.314
2BH	AVDD×0.316
2CH	AVDD×0.318
2DH	AVDD×0.321
2EH	AVDD×0.325
2FH	AVDD×0.328
30H	AVDD×0.332
31H	AVDD×0.336
32H	AVDD×0.339
33H	AVDD×0.342
34H	AVDD×0.345
35H	AVDD×0.348
36H	AVDD×0.351
37H	AVDD×0.355
38H	AVDD×0.359
39H	AVDD×0.364
3AH	AVDD×0.369
3BH	AVDD×0.375
3CH	AVDD×0.382
3DH	AVDD×0.394
3EH	AVDD×0.421
3FH	AVDD×0.499

FITIPOWER CONFIDENTIAL
NO DISCLOSURE

10.4. Input Timing Table (4Lane)

For 1024RGB x 768 panel

DE mode

Parameter	Symbol	Value			Unit
		Min.	Typ.	Max.	
DCLK frequency @Frame rate=60hz	fclk	52	65	71	Mhz
Horizontal display area	thd	1024			DCLK
HSYNC period time	th	1114	1344	1400	DCLK
HSYNC blanking	thb+thfp	90	320	376	DCLK
Vertical display area	Tvd	768			H
VSYNC period time	Tv	778	806	845	H
VSYNC blanking	Tvb+Tvfp	10	38	77	H

HV mode

Horizontal input timing

Parameter		Symbol	Value			Unit
Horizontal display area		thd	1024			DCLK
DCLK frequency@ Frame rate=60hz		fclk	Min.	Typ.	Max.	
			57	65	70.5	Mhz
1 Horizontal Line		th	1200	1344	1400	DCLK
HSYNC pulse width	Min.	thpw	1			
	Typ.		70			
	Max.		140			
HSYNC blanking		thb	160	160	160	
HSYNC front porch		thfp	16	160	216	

HV mode

Vertical input timing

Parameter	Symbol	Value			Unit
		Min.	Typ.	Max.	
Vertical display area	tvd	768			H
VSYNC period time	tv	792	806	840	H
VSYNC pulse width	tvpw	1	10	20	H
VSYNC back porch	tvb	23	23	23	H
VSYNC front porch	tvfp	1	15	49	H

FITIPOWER CONFIDENTIAL
NO DISCLOSURE

10.4.1. Vertical input timing

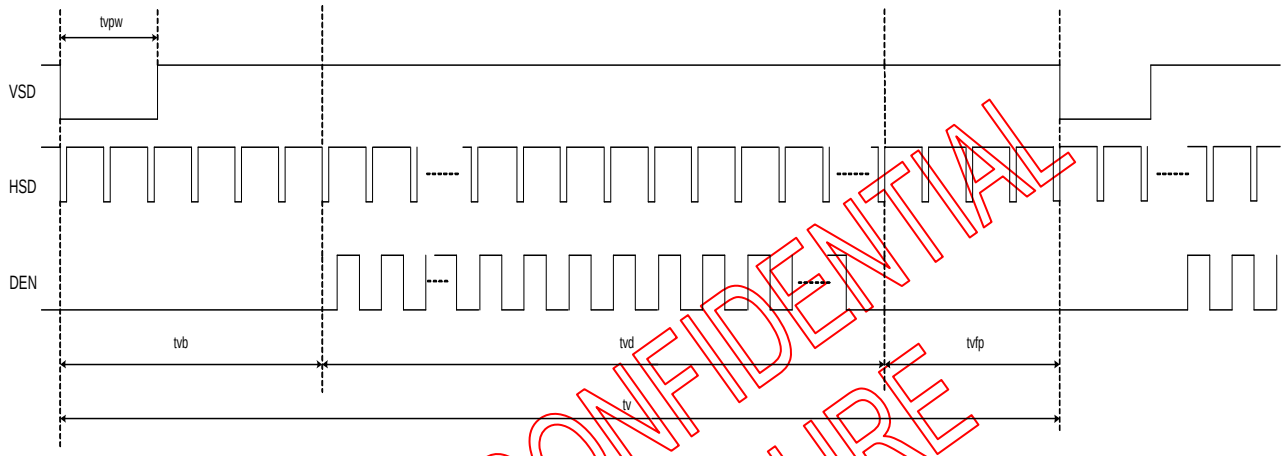

Vertical input timing

10.4.2. Horizontal input timing

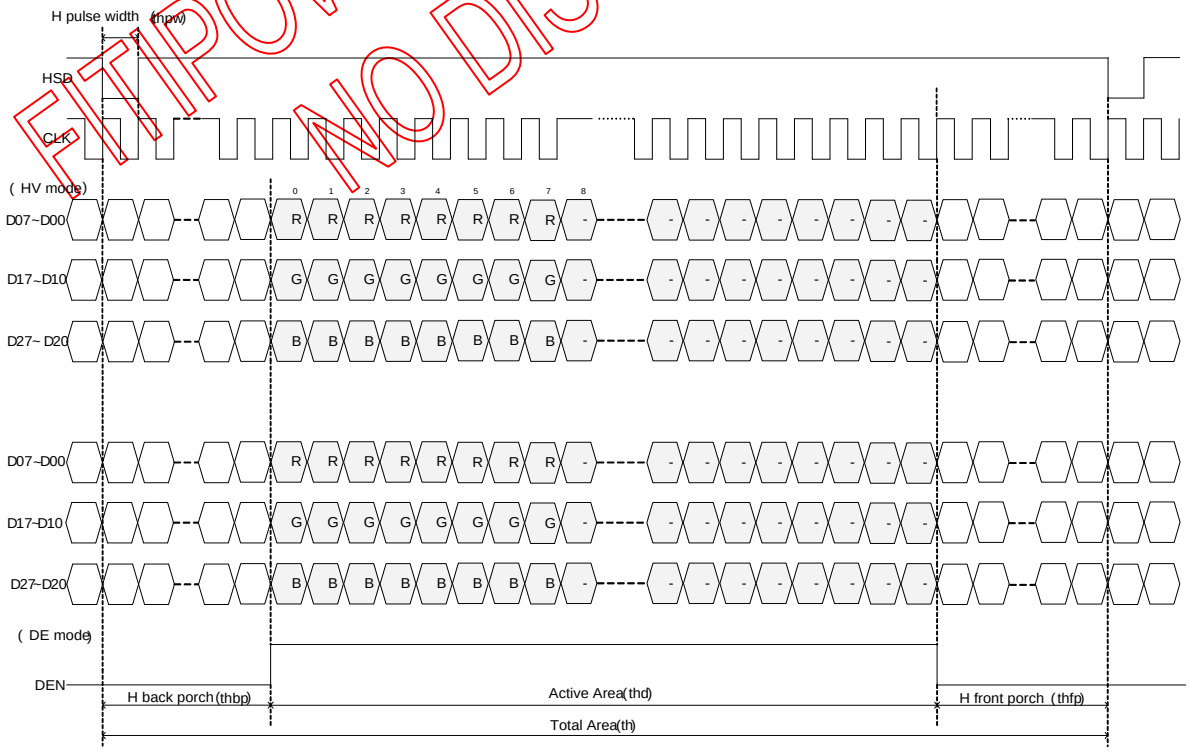

Horizontal input timing

FITIPOWER CONFIDENTIAL
NO DISCLOSURE

DE mode

Parameter	Symbol	Value			Unit
		Min.	Typ.	Max.	
DCLK frequency @Frame rate=60hz	fclk	40.8	51.2	67.2	Mhz
Horizontal display area	thd	1024			DCLK
HSYNC period time	th	1114	1344	1400	DCLK
HSYNC blanking	thb+thfp	90	320	376	DCLK
Vertical display area	Tvd	600			H
VSYNC period time	Tv	610	635	800	H
VSYNC blanking	Tvb+Tvfp	10	35	200	H

HV mode
Horizontal input timing

Parameter		Symbol	Value			Unit
Horizontal display area		thd	1024			DCLK
DCLK frequency@ Frame rate=60hz		fclk	Min.	Typ.	Max.	
			44.9	51.2	63	Mhz
1 Horizontal Line		th	1200	1344	1400	DCLK
HSYNC pulse width	Min.	thpw	1			
	Typ.		70			
	Max.		140			
HSYNC blanking		thb	160	160	160	
HSYNC front porch		thfp	16	160	216	

HV mode
Vertical input timing

Parameter	Symbol	Value			Unit
		Min.	Typ.	Max.	
Vertical display area	tvd	600			H
VSYNC period time	tv	624	635	750	H
VSYNC pulse width	tvpw	1	10	20	H
VSYNC back porch	tvb	23	23	23	H
VSYNC front porch	tvfp	1	12	127	H

FITIPOWER CONFIDENTIAL
NO DISCLOSURE

For 800RGB x 600 panel

DE mode

Parameter	Symbol	Value			Unit
		Min.	Typ.	Max.	
DCLK frequency @Frame rate=60hz	fclk	32.6	39.6	62.4	Mhz
Horizontal display area	thd	800			DCLK
HSYNC period time	th	890	1000	1300	DCLK
HSYNC blanking	thb+thfp	90	200	500	DCLK
Vertical display area	Tvd	600			H
VSYNC period time	Tv	610	660	800	H
VSYNC blanking	Tvb+Tvfp	10	60	200	H

HV mode

Horizontal input timing

Parameter		Symbol	Value			Unit
Horizontal display area		thd	800			DCLK
DCLK frequency@ Frame rate=60hz		fclk	Min.	Typ.	Max.	
			34.5	39.6	50.4	Mhz
1 Horizontal Line		th	900	1000	1200	DCLK
HSYNC pulse width	Min.	thpw	1			
	Typ.		20			
	Max.		40			
HSYNC blanking		thb	88	88	88	
HSYNC front porch		thfp	12	112	312	

HV mode

Vertical input timing

Parameter	Symbol	Value			Unit
		Min.	Typ.	Max.	
Vertical display area	tvd	600			H
VSYNC period time	tv	640	660	700	H
VSYNC pulse width	tvpw	1	10	20	H
VSYNC back porch	tvb	39	39	39	H
VSYNC front porch	tvfp	1	21	61	H

FITIPOWER CONFIDENTIAL
NO DISCLOSURE

For 800RGB x 480 panel

DE mode

Parameter	Symbol	Value			Unit
		Min.	Typ.	Max.	
DCLK frequency @Frame rate=60hz	fclk	26.2	29.2	54.6	Mhz
Horizontal display area	thd	800			DCLK
HSYNC period time	th	890	928	1300	DCLK
HSYNC blanking	thb+thfp	90	128	500	DCLK
Vertical display area	Tvd	480			H
VSYNC period time	Tv	490	525	700	H
VSYNC blanking	Tvb+Tvfp	10	45	220	H

HV mode

Horizontal input timing

Parameter		Symbol	Value			Unit
Horizontal display area		thd	800			DCLK
DCLK frequency@ Frame rate=60hz		fclk	Min.	Typ.	Max.	
			27.7	29.2	39.6	Mhz
1 Horizontal Line		th	900	928	1100	DCLK
HSYNC pulse width	Min.	thpw	1			
	Typ.		20			
	Max.		40			
HSYNC blanking		thb	88	88	88	
HSYNC front porch		thfp	12	40	212	

HV mode

Vertical input timing

Parameter	Symbol	Value			Unit
		Min.	Typ.	Max.	
Vertical display area	tvd	480			H
VSYNC period time	tv	513	525	600	H
VSYNC pulse width	tvpw	1	2	3	H
VSYNC back porch	tvb	32	32	32	H
VSYNC front porch	tvfp	1	13	88	H

FITIPOWER CONFIDENTIAL
NO DISCLOSURE

10.5. Input Timing Table (2Lane)

For 1024RGB x 600 panel

DE mode

Parameter	Symbol	Value			Unit
		Min.	Typ.	Max.	
DCLK frequency @Frame rate=60hz	fclk	40.8	51.2		Mhz
Horizontal display area	thd	1024			DCLK
HSYNC period time	th	1114	1344		DCLK
HSYNC blanking	thb+thfp	90	320		DCLK
Vertical display area	Tvd	600			H
VSYNC period time	Tv	610	635		H
VSYNC blanking	Tvb+Tvfp	10	35		H

HV mode

Horizontal input timing

Parameter		Symbol	Value			Unit
Horizontal display area		thd	1024			DCLK
DCLK frequency@ Frame rate=60hz		fclk	Min.	Typ.	Max.	
			44.9	51.2		Mhz
1 Horizontal Line		th	1200	1344		DCLK
HSYNC pulse width	Min.	thpw	1			
	Typ.		70			
	Max.		140			
HSYNC blanking		thb	160	160		
HSYNC front porch		thfp	16	160		

HV mode

Vertical input timing

Parameter	Symbol	Value			Unit
		Min.	Typ.	Max.	
Vertical display area	tvd	600			H
VSYNC period time	tv	624	635		H
VSYNC pulse width	tvpw	1	20		H
VSYNC back porch	tvb	23	23		H
VSYNC front porch	tvfp	1	12		H

FITIPOWER CONFIDENTIAL
NO DISCLOSURE

11. ABSOLUTE MAXIMUM RATING

VOLTAGE (TA = 25°C, GND = AGND = GND_IF = 0V)

	Min.	Max.	Unit
Digital Supply Voltage, VDD	-0.3	+2.0	V
Analog Supply Voltage, AVDD, V1~V14	-0.5	+15.0	V

TEMPERATURE

	Min.	Max.	Unit
Operating temperature	-20	+85	°C
Storage temperature	-55	+125	°C

FITIPOWER CONFIDENTIAL
NO DISCLOSURE

12. RECOMMENDED OPERATING RANGE

Recommended Operating Range (TA = -20 to 85°C, GND = AGND = GND_IF = 0V)

Parameter	Symbol	Min.	Typ.	Max.	Unit
Digital supply voltage	VDD	1.71	1.8	1.89	V
MIPI supply voltage	VDD_IF	1.71	1.8	1.89	V
Analog supply voltage	AVDD	8	-	13.5	V

FITIPOWER CONFIDENTIAL
NO DISCLOSURE

13. DC ELECTRICAL CHARACTERISTICS

13.1. Basic DC Characteristic

(VDD=VDD_IF=1.8V, AVDD=8 to 13.5V, GND=AGND=GND_IF=0V)

Parameter	Symbol	Condition	Min.	Typ.	Max.	Unit
Low level input voltage	Vil	For the digital circuit	0	-	0.3×VDD	V
High level input voltage	Vih	For the digital circuit	0.7×VDD	-	VDD	V
Input leakage current	Ii	For the digital circuit	-	-	±1	μA
High level output voltage	Voh	Ioh= -400 μA	VDD – 0.4	-	-	V
Low level output voltage	Vol	Iol= +400 μA	-	-	GND+0.4	V
Pull low/high resistor	Ri	For the digital input pin @ VDD_IF=1.8V	200K	250K	300K	ohm
Digital Operation current	Idd	Fclk=51.2MHz, VDD=VDD_IF=1.8V	-	TBD	-	mA
Digital Stand-by current	Ist1	Clock and all functions are stopped	-	10	50	μA
Analog Operating Current	Idda	No load, Fclk=51.2MHz, @AVDD=13.5V,V1=13.4V, V14=0.1V	-	10	12	mA
Analog Stand-by current	Ist2	No load, clock and all functions are stopped	-	10	50	μA
Input level of V1 ~ V7	Vref1	Gamma correction voltage input	0.4*AVDD	-	AVDD-0.1	V
Input level of V8 ~ V14	Vref2	Gamma correction voltage input	0.1	-	0.6*AVDD	V
Output Voltage deviation	Vod1	Vo = AGND+0.1V ~ AGND+0.5V and Vo = AVDD-0.5V ~ AVDD-0.1V	-	±20	±35	mV
Output Voltage deviation	Vod2	Vo = AGND+0.5V ~ AVDD-0.5V	-	±15	±20	mV
Output Voltage Offset between Chips	Voc	Vo = AGND+0.5V ~ AVDD-0.5V	-	-	±20	mV
Dynamic Range of Output	Vdr	SO1 ~ 1536	0.1	-	AVDD-0.1	V
Sinking Current of Outputs	IOLy	SO1 ~ 1536; Vo=0.1V v.s 1.0V , AVDD=13.5V	80	-	-	uA
Driving Current of Outputs	IOHy	SO1 ~ 1536; Vo=13.4V v.s 12.5V , AVDD=13.5V	80	-	-	uA
Resistance of Gamma Table	Rg	Rn: Internal gamma resistor	0.7*Rn	1.0*Rn	1.3*Rn	ohm

FITIPOWER CONFIDENTIAL
NO DISCLOSURE

13.2. MIPI Interface DC Characteristic

(VDD=VDD_IF=1.8V,AVDD=8 to 13.5V,GND=AGND=GND_IF=0V,TA=-20℃ to 85℃)

Parameter	Symbol	Min.	Typ.	Max.	Unit
MIPI Characteristics for High Speed Receiver					
Single-ended input low voltage	V_{ILHS}	-40	-	-	mV
Single-ended input high voltage	V_{IHHS}	-	-	460	mV
Common-mode voltage	V_{CDRXDC}	70	-	330	mV
Differential input impedance	Z_{ID}		100		ohm
HS transmit differential voltage(VOD=VDP-VDN)	$\|V_{OD}\|$	140	200	250	mV
MIPI Characteristics for Low Power Mode					
Pad signal voltage range	V_I	-50	-	1350	mV
Ground shift	V_{GNDSH}	-50	-	50	mV
Logic 0 input threshold	V_{IL}	0	-	550	mV
Logic 1 input threshold	V_{IH}	880	-	1350	mV
Input hysteresis	V_{HYST}	25	-	-	mV
Output low level	V_{OL}	-50	-	50	mV
Output high level	V_{OH}	1.1	1.2	1.3	V
Output impedance of Low Power Transmitter	Z_{OLP}	80	100	125	ohm
Logic 0 contention threshold	$V_{ILCD,MAX}$	-	-	200	mV
Logic 0 contention threshold	$V_{IHCD,MIN}$	450	-	-	mV

FITIPOWER CONFIDENTIAL
NO DISCLOSURE

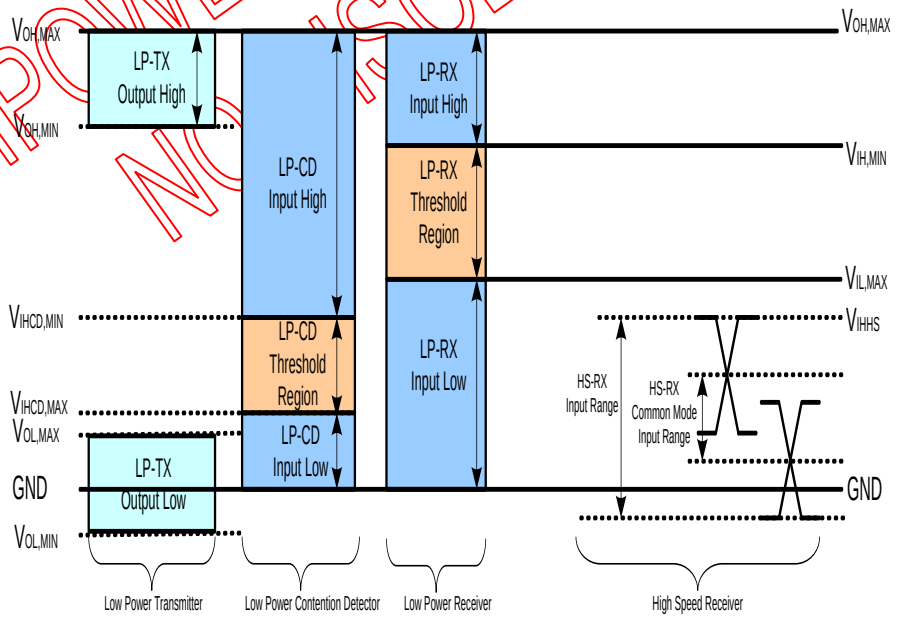

13.3. Power Block DC Characteristic

(VDD=VDD_IF=1.8V, AVDD=8 to 13.5V, GND=AGND=GND_IF=0V,TA=-20 to +85℃)

Parameter	Symbol	Min.	Typ.	Max.	Unit	Condition
Base drive current for PWM	IDRV	-	-	60	mA	DRVA =0.7V
DRV output voltage for PWM	VDRV	0	-	VDD	V	
Feedback voltage for PWM	VFB	1.1	1.2	1.3	V	
Duty cycle maximum	Dmax	-	-	85	%	
VCOM buffer input voltage	VCOMI	1	-	AVDD	V	
VCOM buffer output voltage	VCOMO	VCOMI-0.2	VCOMI	VCOMI+0.2	V	
VCOM buffer output current	IVCOM	-	-	10	mA	VCOMO=5V vs 4.9V

FITIPOWER CONFIDENTIAL
NO DISCLOSURE

14. AC ELECTRICAL CHARACTERISTIC

14.1. Basic AC Characteristic

(VDD=VDD_IF=1.8V, AVDD=8 to 13.5V, GND=AGND=GND_IF=0V,TA=-20 to +85℃)
VDD/GRB AC characteristic

Parameter	Symbol	Min.	Typ.	Max.	Unit	Condition
VDD power slew rate	T_{POR}	-	-	20	ms	From 0 to 90% VDD
GRB active pulse width	T_{GRB}	1	-	-	ms	VDD=VDD_IF= 1.8V
VDD resettle time	T_{RES}	1	-	-	s	

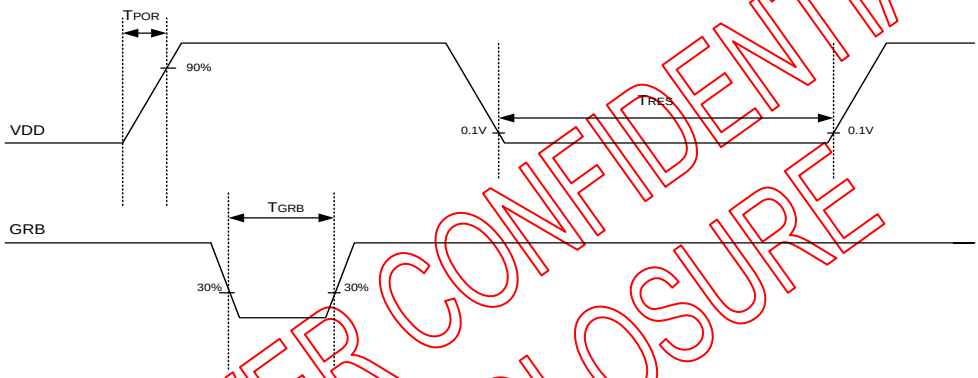

FITIPOWER CONFIDENTIAL
NO DISCLOSURE

14.2. MIPI AC Characteristic

14.2.1. LP Transmitter AC Specification

Parameter		Symbol	Min	Typ	Max	Units	Notes
15%~85% rising time and falling time		T_{RLP} /T_{FLP}	-	-	25	ns	-
30%~85% rising time and falling time		T_{REOT}	-	-	35	ns	-
Pulse width of LP exclusive-OR clock	First LP EXOR clock pulse after STOP state or Last pulse before stop state	$T_{LP\text{-}PULSE\text{-}TX}$	40	-	-	ns	-
	All other pulses		20	-	-	ns	-
Period of the LP EXOR clock		$T_{LP\text{-}PER\text{-}TX}$	90	-	-	mV/ns	-
Slew Rate @C_{LOAD} =0pF		δ V/δ t_{SR}	30	-	500	mV/ns	-
Slew Rate @C_{LOAD} =5pF			30	-	200	mV/ns	-
Slew Rate @C_{LOAD} =20pF			30	-	150	mV/ns	-
Slew Rate @C_{LOAD} =70pF			30	-	100	mV/ns	-
Load Capacitance		T_{RLP}	-	-	70	pF	-

CONFIDENTIAL
DISCLOSURE

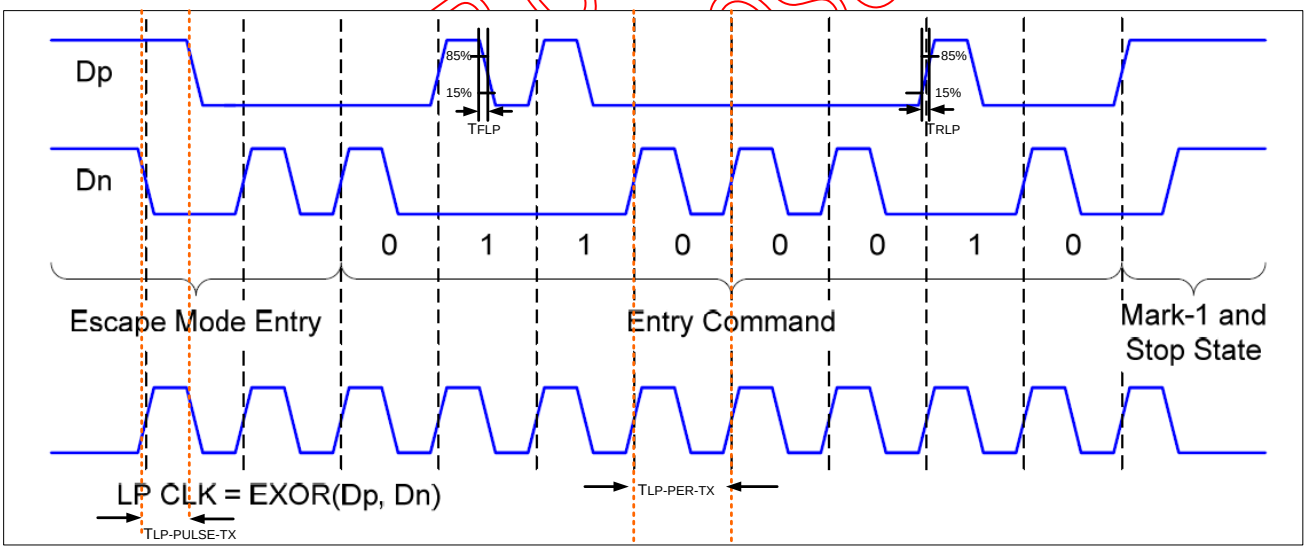

14.2.2. Turnaround Procedure

Turnaround Procedure Operation Timing Parameters

Parameter	Symbol	Min	Typ	Max	Units
Length of any Low-Power state period: Master side	T_{LPX}	50	-	75	ns
Length of any Low-Power state period: Slave side	T_{LPX}	50	55.56	58.34	ns
Ratio of T_{LPX}(Master)/ T_{LPX} (Slave) between Master and Slave side	Ratio T_{LPX}	2/3	-	3/2	
Time-out before new TX side start driving	$T_{TA\text{-}Sure}$	T_{LPX}	-	$2T_{LPX}$	ns
Time to drive LP-00 by new TX	$T_{TA\text{-}GET}$	-	$5T_{LPX}$	-	ns
Time to drive LP-00 after Turnaround Request	$T_{TA\text{-}GO}$	-	$4T_{LPX}$	-	ns

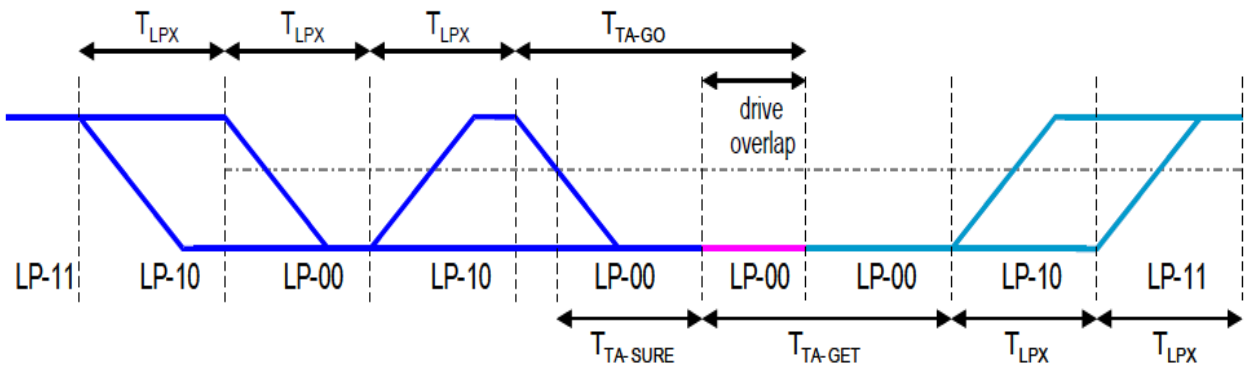

FITIPOWER CONFIDENTIAL
NO DISCLOSURE

14.2.3. High speed transmission

Parameter	Symbol	Min	Typ	Max	Units
UI instantaneous	UI_{INST}	2	-	12.5	ns
Data to Clock Skew(measured at transmitter)	$T_{SKEW(TX)}$	-0.15	-	0.15	UI_{INST}
Data to Clock Setup time(measured at receiver)	$T_{SETUP(RX)}$	0.15	-	-	UI_{INST}
Data to Clock Hold time(measured at receiver)	$T_{HOLD(RX)}$	0.15	-	-	UI_{INST}
20%~80% rise time and fall time	T_R, T_F	150	-	-	ps
		-	-	0.3	UI_{INST}

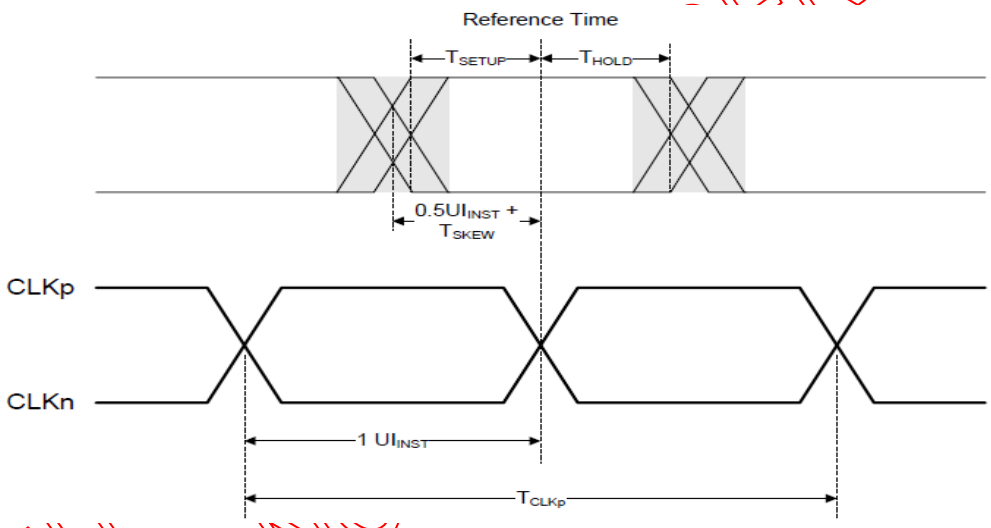

14.2.4. High Speed Clock Transmission

Parameter	Symbol	Min	Typ	Max	Units
Time that the transmitter shall continue sending HS clock after the last associated Data Lane has transitioned to LP mode	$T_{CLK-POST}$	60+52UI	-	-	ns
Detection time that the clock has stopped toggling	$T_{CLK-MISS}$	-	-	60	ns
Time to drive LP-00 to prepare for HS clock transmission	$T_{CLK-PREPARE}$	38	-	95	ns
Minimum lead HS-0 drive period before starting clock	$T_{CLK-PREPARE}$ + $T_{CLK-ZERO}$	300	-	-	ns
Time to enable Clock Lane receiver line termination measured from when Dn cross $V_{IL,MAX}$	$T_{HS-TERM-EN}$	-	-	38	ns
Minimum time that the HS clock must be prior to any associated data lane beginning the transmission from LP to HS mode	$T_{CLK-PRE}$	8	-	-	UI
Time to drive HS differential state after last payload clock bit of a HS transmission burst	$T_{CLK-TRAIL}$	60	-	-	ns

CONFIDENTIAL

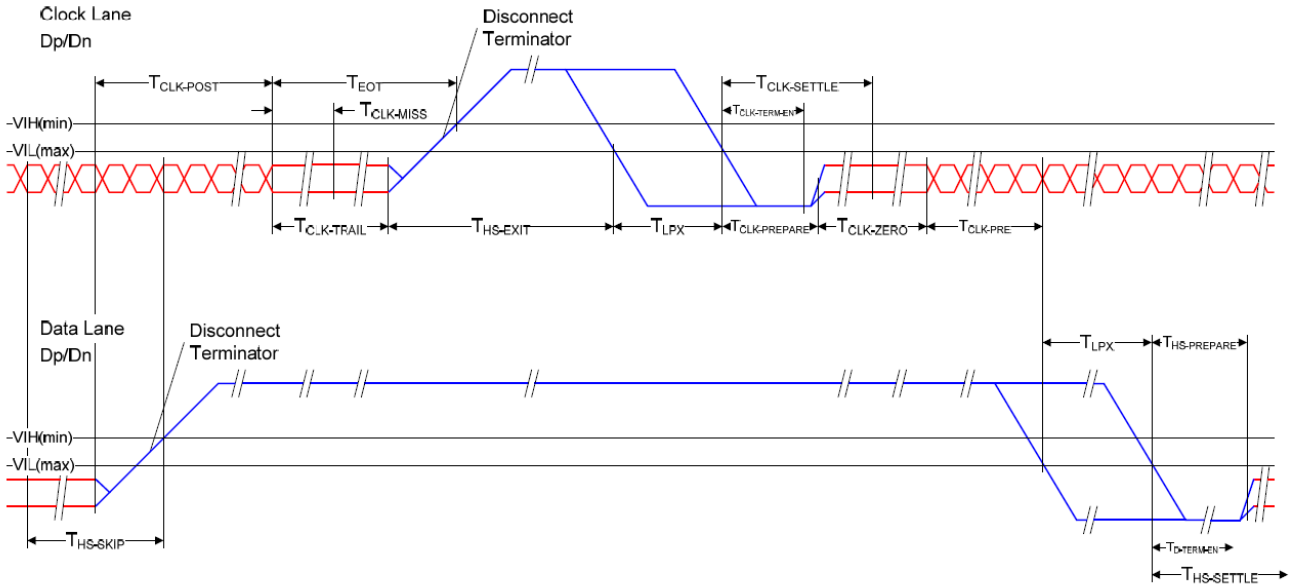

14.2.5. High Speed Data Transmission in Bursts

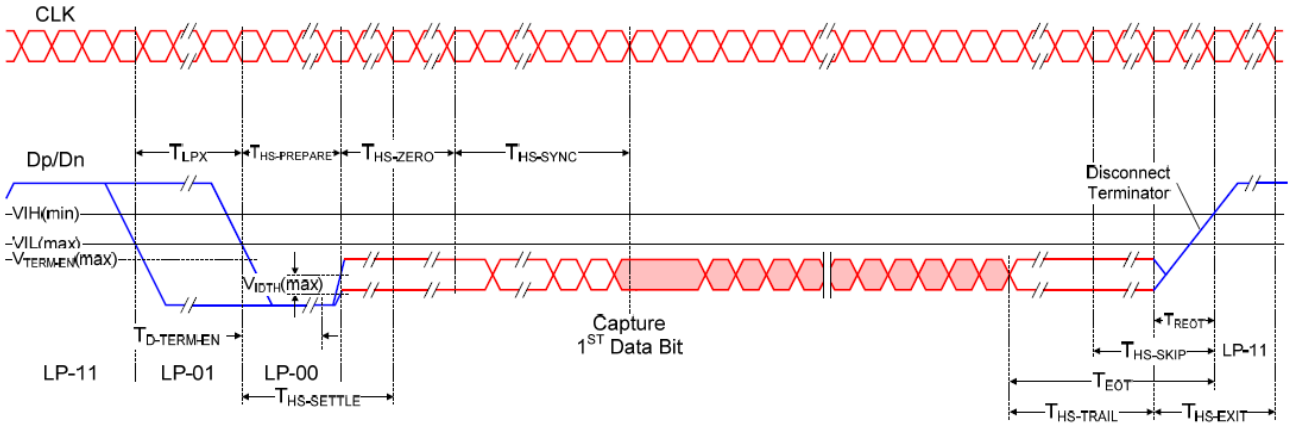

FITIPOWER CONFIDENTIAL
NO DISCLOSURE

14.2.6. LP11 timing request between data transformation

When Clock lane of DSI TX chip always keeps High speed mode, then Clock lane never go back to Low power mode. If Date lane of TX chip needs to transmit the next new data transmission or sequence, after the end of Low power mode or High speed mode or BTA. Then TX chip needs to keep LP-11 stop state before the next new data transmission, no matter in Low power mode or High speed mode or BTA. The LP-11 minimum timing is required for RX chip in the following 9 conditions, include of LP–LP, LP–HS, HS–LP, HS–HS, BTA–BTA, LP–BTA, BTA–LP, HS–BTA, and BTA–HS.This rule is suitable for short or long packet between TX and RX data transmission.

(1) Timing between LP-LP command

FITIPOWER CONFIDENTIAL
NO DISCLOSURE

Parameter	Symbol	Min	Typ	Max	Unit
LP-11 delay to start of the new Escape Mode Entry	TDEE	150	-	-	ns

(2) Timing between LP-HS command

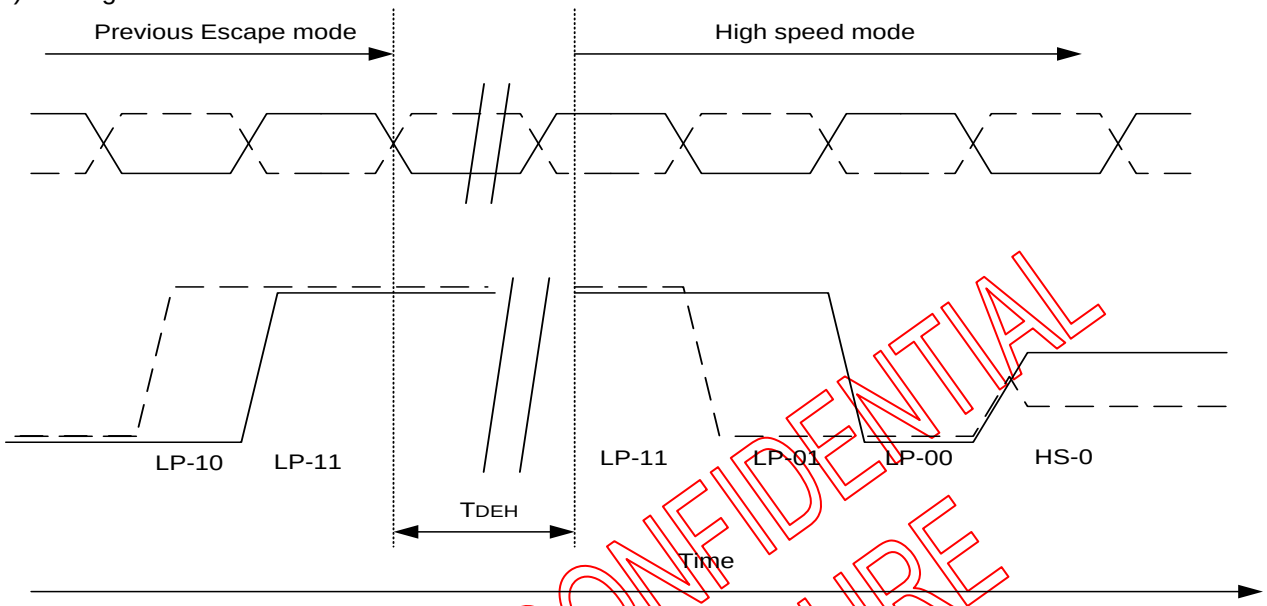

Parameter	Symbol	Min	Typ	Max	Unit
LP-11 delay to start of the Entering High Speed Mode	T_{DEH}	Max(150,32UI)	-	-	ns

(3) Timing between HS-LP command

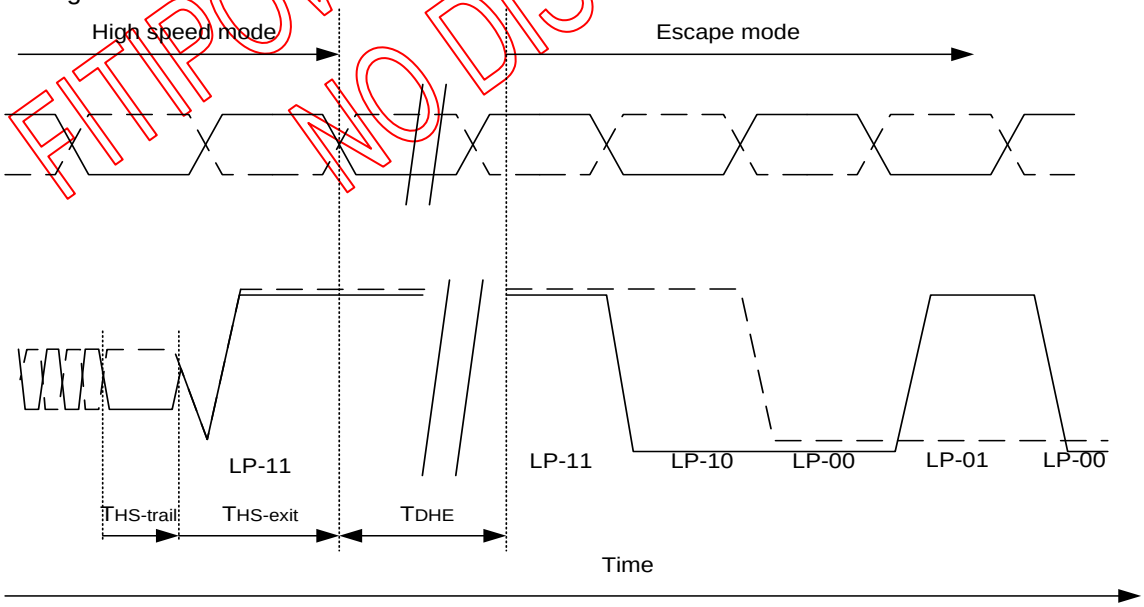

Parameter	Symbol	Min	Typ	Max	Unit
LP-11 delay to start of the Escape Mode Entry	T_{DHE}	Max(150,32UI)	-	-	ns

FITIPOWER CONFIDENTIAL
NO DISCLOSURE

(4) Timing between HS-HS command

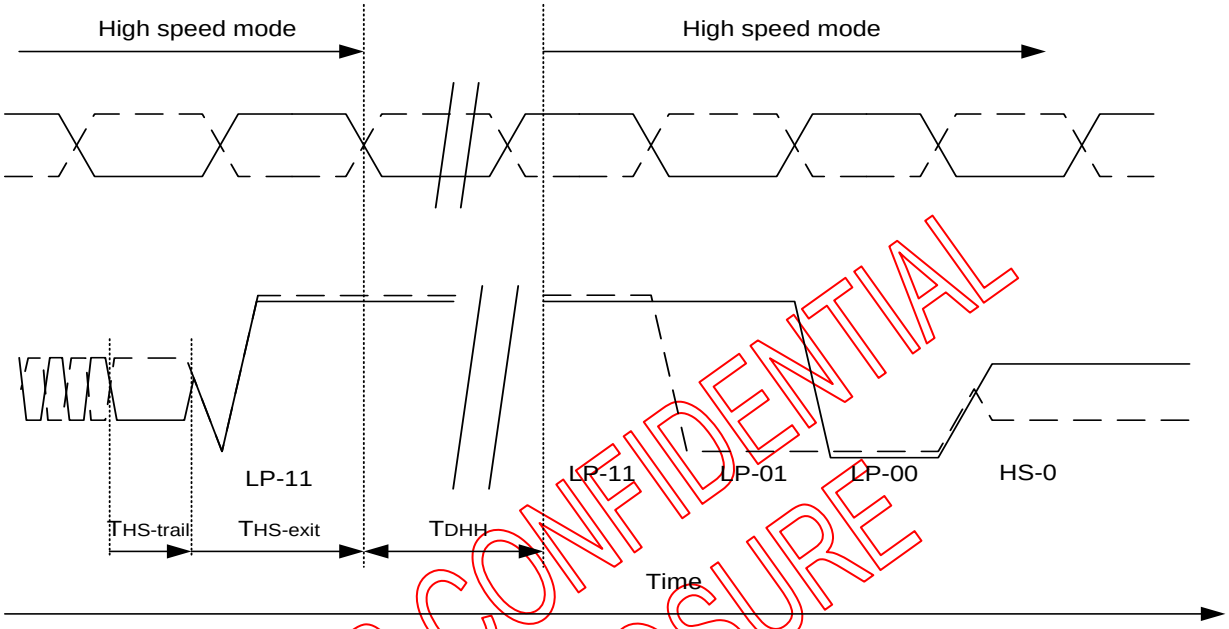

Parameter	Symbol	Min	Typ	Max	Unit
LP-11 delay to start of the Entering High Speed Mode	T_{DHH}	Max(150,32UI)	-	-	ns

(5) Timing between BTA-BTA command

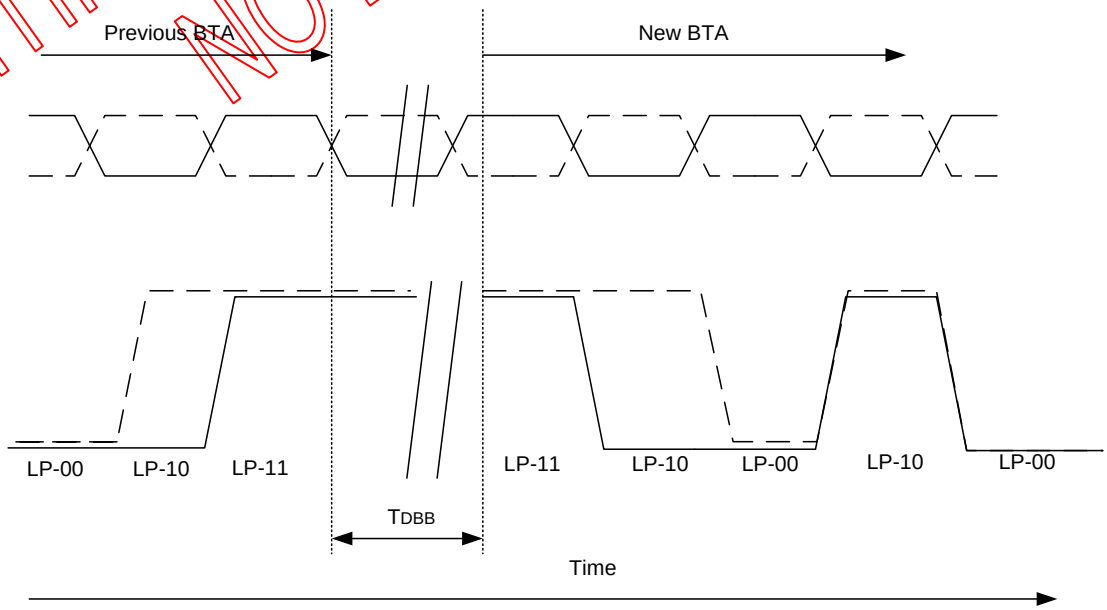

Parameter	Symbol	Min	Typ	Max	Unit
LP-11 delay to start of the new BTA	T_{DBB}	150	-	-	ns

FITIPOWER CONFIDENTIAL
NO DISCLOSURE

(6) Timing between LP-BTA command

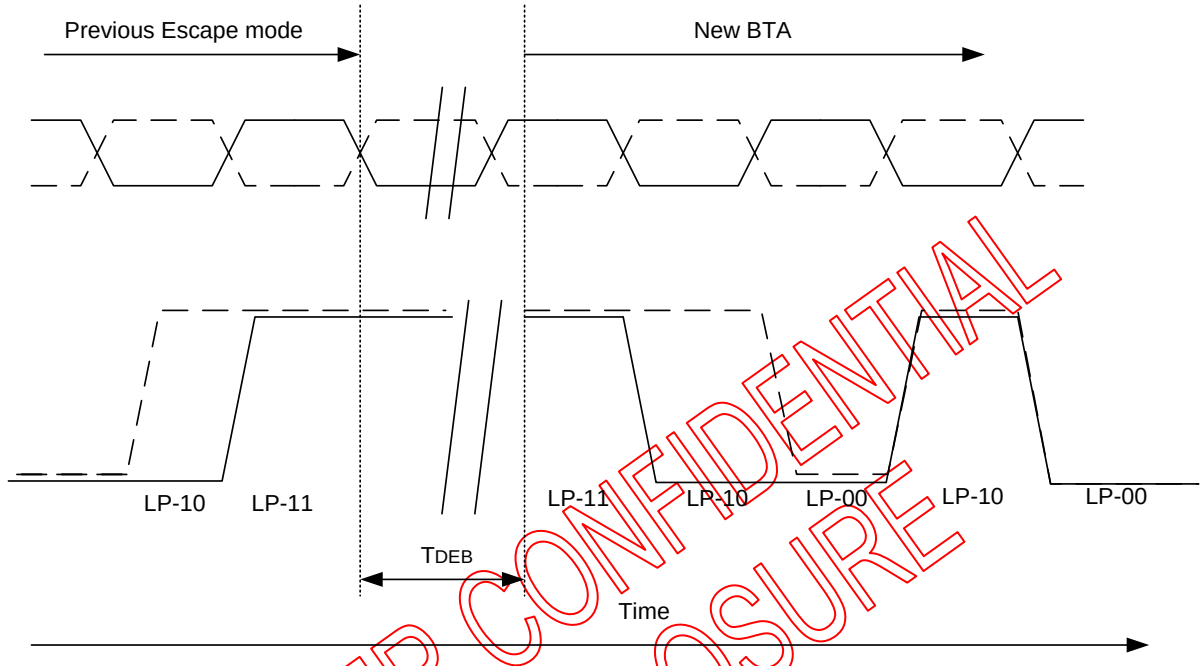

Parameter	Symbol	Min	Typ	Max	Unit
LP-11 delay to start of the new BTA	T_{DEB}	150	-	-	ns

(7) Timing between BTA-LP command

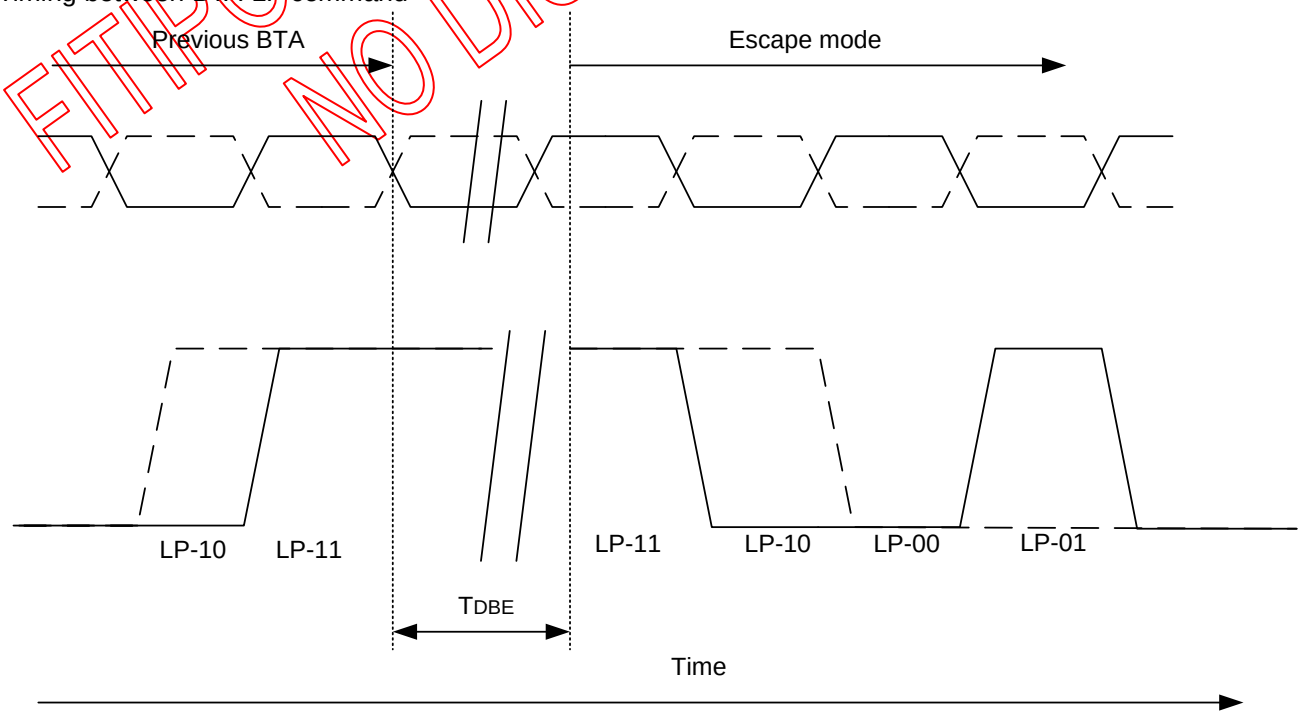

Parameter	Symbol	Min	Typ	Max	Unit
LP-11 delay to start of the Escape Mode Entry	T_{DBE}	150	-	-	ns

FITIPOWER CONFIDENTIAL
NO DISCLOSURE

(8) Timing between HS-BTA command

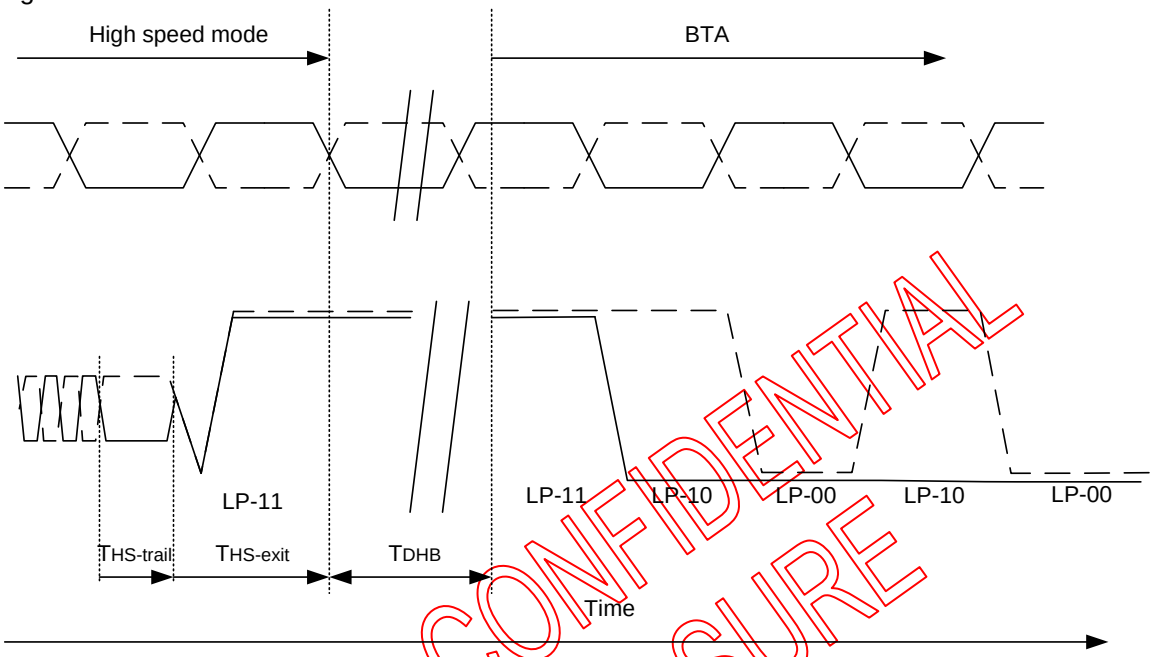

Parameter	Symbol	Min	Typ	Max	Unit
LP-11 delay to start of the BTA	TDHB	Max(150,32UI)	-	-	ns

(9) Timing between BTA-HP command

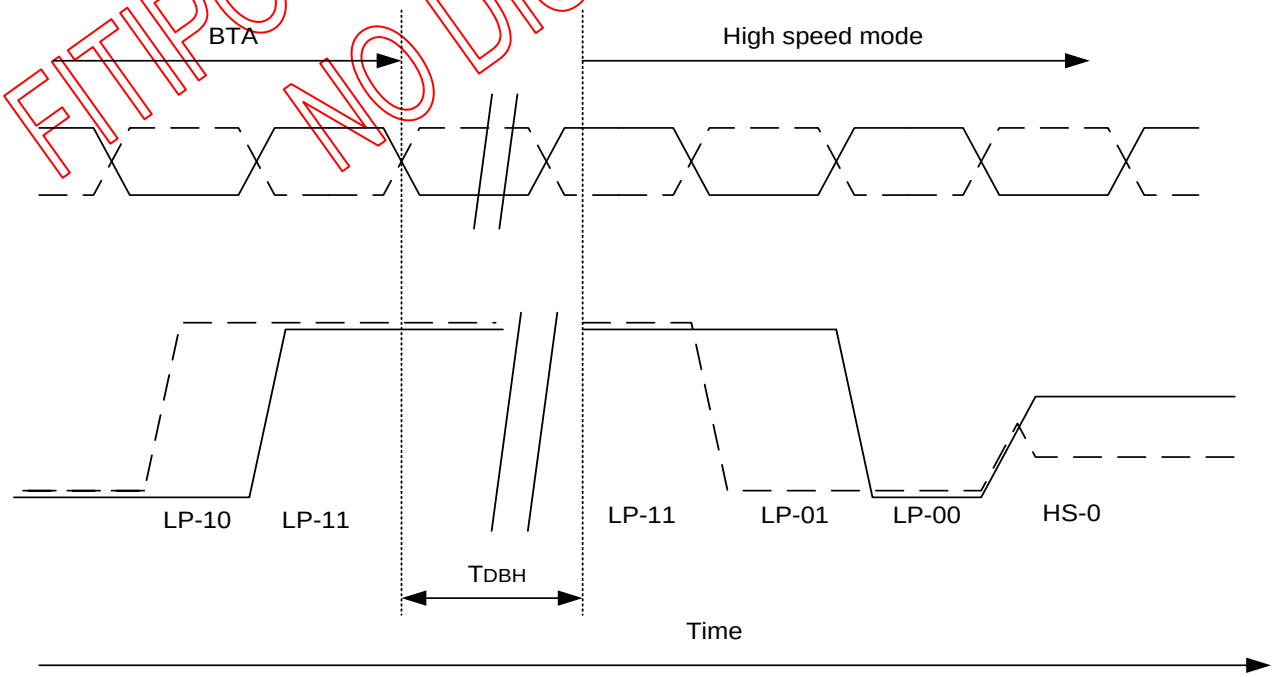

Parameter	Symbol	Min	Typ	Max	Unit
LP-11 delay to start of the Entering High Speed Mode	TDBH	Max(150,32UI)	-	-	ns

FITIPOWER CONFIDENTIAL
NO DISCLOSURE

14.3. Output Timing Table

- Dual gate mode

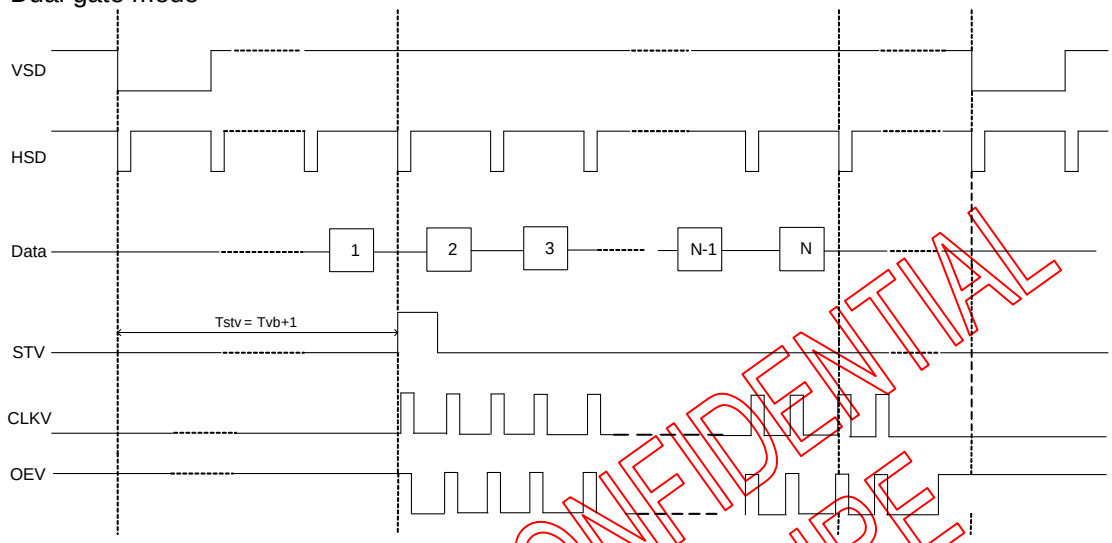

Fig. 11. Vertical output timing

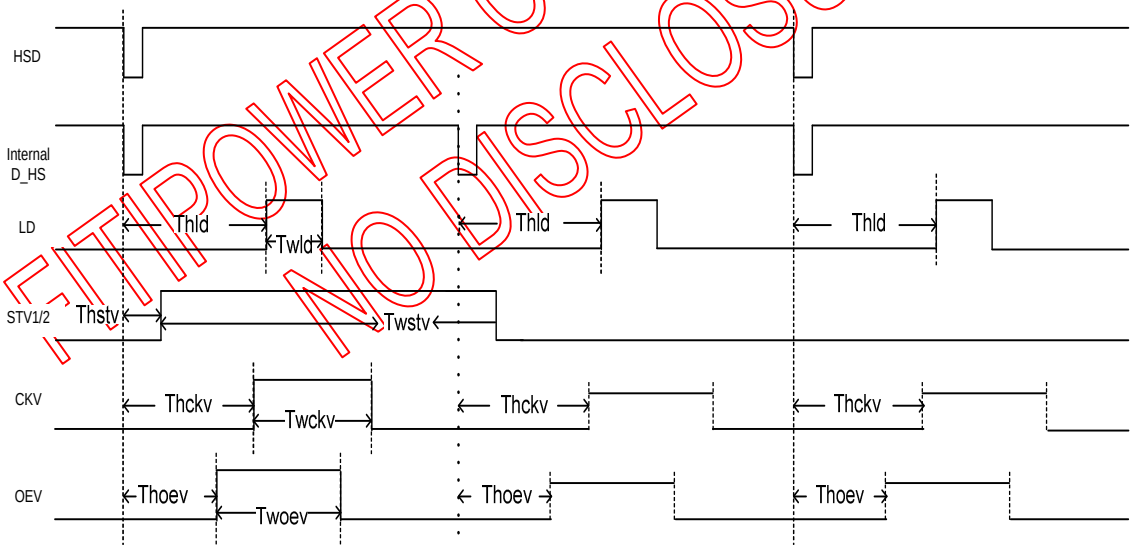

Fig. 11. Gate output timing

FITIPOWER CONFIDENTIAL
NO DISCLOSURE

Analog output AC characteristic

Parameter	Symbol	Min.	Typ.	Max	Unit
Source Driver output stable time	Tsst	-	3	-	μ s

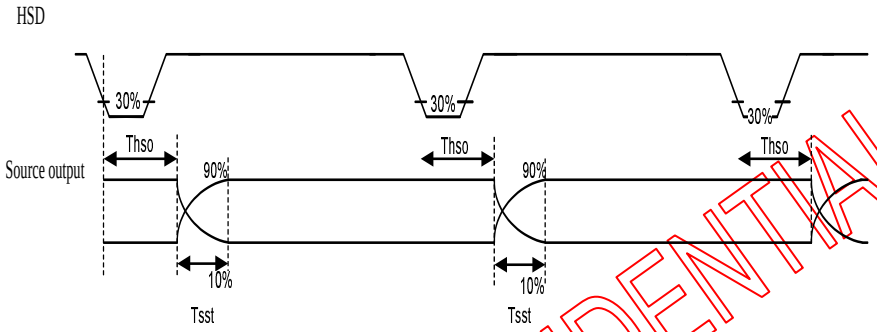

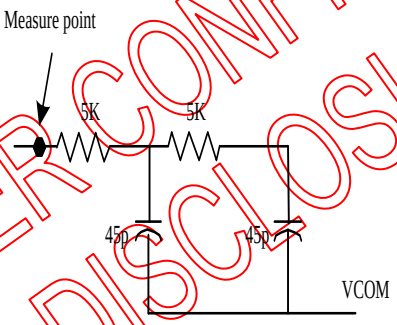

FITIPOWER CONFIDENTIAL
NO DISCLOSURE

15. CHIP OUTLINE DIMENSIONS

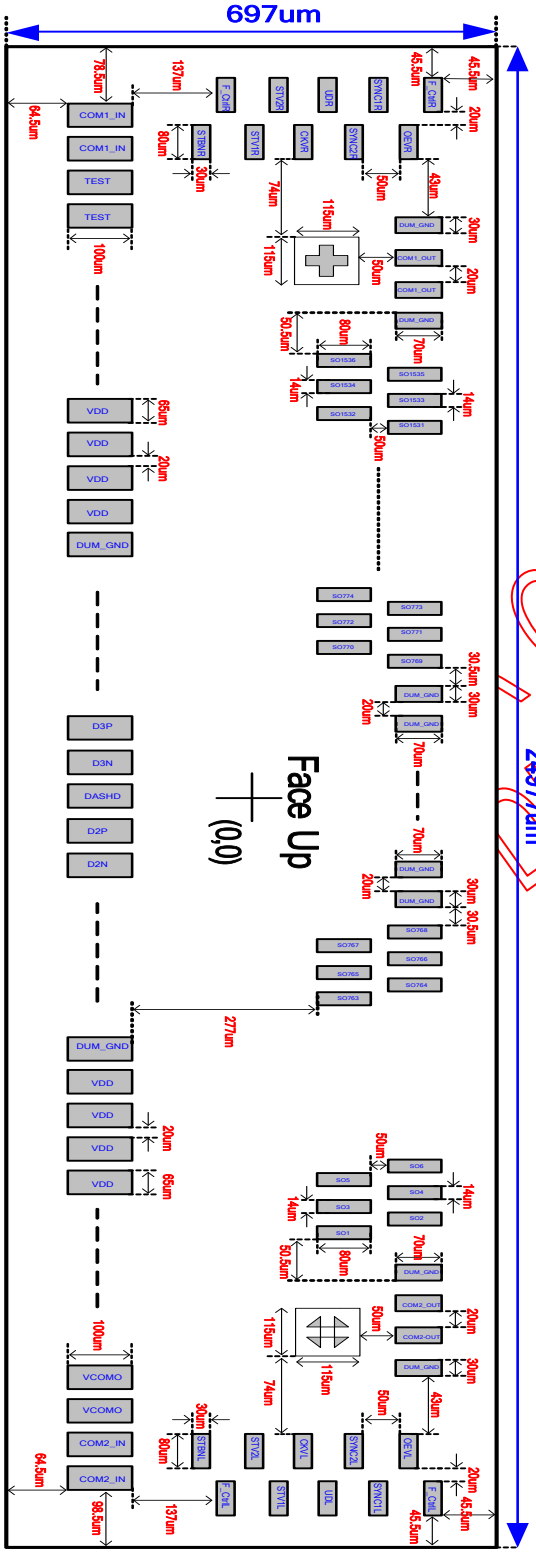

Bump Height:9um

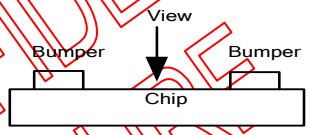

CONFIDENTIAL DISCLOSURE

15.1. Alignment Mark

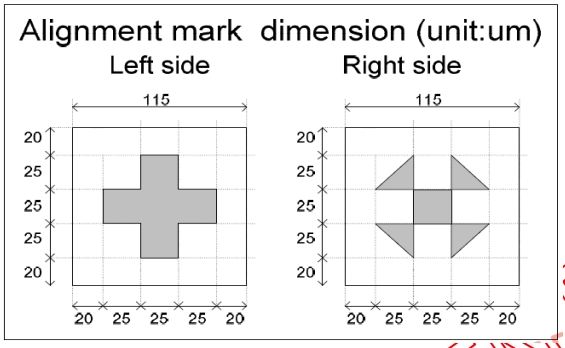

FITIPOWER CONFIDENTIAL
NO DISCLOSURE

16. PAD COORDINATE

Pin	Customer	X	Y	W	H
1	COM1_IN	-12377.5	-234	65	100
2	COM1_IN	-12292.5	-234	65	100
3	TP1	-12207.5	-234	65	100
4	TP2	-12122.5	-234	65	100
5	TP3	-12037.5	-234	65	100
6	TP4	-11952.5	-234	65	100
7	SHIELDING	-11867.5	-234	65	100
8	AGND	-11782.5	-234	65	100
9	AGND	-11697.5	-234	65	100
10	AGND	-11612.5	-234	65	100
11	AGND	-11527.5	-234	65	100
12	SHIELDING	-11442.5	-234	65	100
13	AVDD	-11357.5	-234	65	100
14	AVDD	-11272.5	-234	65	100
15	AVDD	-11187.5	-234	65	100
16	AVDD	-11102.5	-234	65	100
17	SHIELDING	-11017.5	-234	65	100
18	GND	-10932.5	-234	65	100
19	GND	-10847.5	-234	65	100
20	GND	-10762.5	-234	65	100
21	GND	-10677.5	-234	65	100
22	SHIELDING	-10592.5	-234	65	100
23	VDD	-10507.5	-234	65	100
24	VDD	-10422.5	-234	65	100
25	VDD	-10337.5	-234	65	100
26	VDD	-10252.5	-234	65	100
27	SHIELDING	-10167.5	-234	65	100
28	TP5	-10082.5	-234	65	100
29	TP6	-9997.5	-234	65	100
30	TP7	-9912.5	-234	65	100
31	TP8	-9827.5	-234	65	100
32	TP9	-9742.5	-234	65	100
33	TP10	-9657.5	-234	65	100
34	TP11	-9572.5	-234	65	100
35	TP12	-9487.5	-234	65	100
36	TP13	-9402.5	-234	65	100
37	TP14	-9317.5	-234	65	100
38	SHIELDING	-9232.5	-234	65	100
39	TP45	-9147.5	-234	65	100
40	TP46	-9062.5	-234	65	100
41	NBW	-8977.5	-234	65	100
42	NBW	-8892.5	-234	65	100
43	PINCTL	-8807.5	-234	65	100
44	PINCTL	-8722.5	-234	65	100
45	SHIELDING	-8637.5	-234	65	100
46	DIMO	-8552.5	-234	65	100
47	DIMO	-8467.5	-234	65	100
48	SHIELDING	-8382.5	-234	65	100
49	DITHER	-8297.5	-234	65	100
50	DITHER	-8212.5	-234	65	100
51	HFRC	-8127.5	-234	65	100
52	HFRC	-8042.5	-234	65	100
53	TP15	-7957.5	-234	65	100
54	TP16	-7872.5	-234	65	100
55	FRAME	-7787.5	-234	65	100
56	FRAME	-7702.5	-234	65	100
57	SEL[0]	-7617.5	-234	65	100
58	SEL[0]	-7532.5	-234	65	100
59	SEL[1]	-7447.5	-234	65	100
60	SEL[1]	-7362.5	-234	65	100
61	CSB	-7277.5	-234	65	100
62	CSB	-7192.5	-234	65	100
63	SHIELDING	-7107.5	-234	65	100
64	SDA	-7022.5	-234	65	100
65	SDA	-6937.5	-234	65	100
66	SHIELDING	-6852.5	-234	65	100
67	SCL	-6767.5	-234	65	100
68	SCL	-6682.5	-234	65	100
69	SHIELDING	-6597.5	-234	65	100
70	VDD	-6512.5	-234	65	100
71	VDD	-6427.5	-234	65	100
72	VDD	-6342.5	-234	65	100
73	VDD	-6257.5	-234	65	100
74	SHIELDING	-6172.5	-234	65	100
75	GND	-6087.5	-234	65	100
76	GND	-6002.5	-234	65	100
77	GND	-5917.5	-234	65	100
78	GND	-5832.5	-234	65	100
79	SHIELDING	-5747.5	-234	65	100
80	AVDD	-5662.5	-234	65	100
81	AVDD	-5577.5	-234	65	100
82	AVDD	-5492.5	-234	65	100
83	AVDD	-5407.5	-234	65	100
84	SHIELDING	-5322.5	-234	65	100
85	AGND	-5237.5	-234	65	100
86	AGND	-5152.5	-234	65	100
87	AGND	-5067.5	-234	65	100
88	AGND	-4982.5	-234	65	100
89	SHIELDING	-4897.5	-234	65	100
90	V1	-4812.5	-234	65	100
91	V1	-4727.5	-234	65	100
92	V2	-4642.5	-234	65	100
93	V2	-4557.5	-234	65	100
94	V3	-4472.5	-234	65	100
95	V3	-4387.5	-234	65	100
96	V4	-4302.5	-234	65	100
97	V4	-4217.5	-234	65	100
98	V5	-4132.5	-234	65	100
99	V5	-4047.5	-234	65	100
100	V6	-3962.5	-234	65	100
101	V6	-3877.5	-234	65	100
102	V7	-3792.5	-234	65	100
103	V7	-3707.5	-234	65	100
104	GAMH	-3622.5	-234	65	100
105	GAMH	-3537.5	-234	65	100
106	SHIELDING	-3452.5	-234	65	100
107	DASHD	-3367.5	-234	65	100
108	LVFMT	-3282.5	-234	65	100
109	DASHD	-3197.5	-234	65	100
110	LVBIT	-3112.5	-234	65	100
111	DASHD	-3027.5	-234	65	100
112	TP17	-2942.5	-234	65	100
113	GND_IF	-2857.5	-234	65	100
114	GND_IF	-2772.5	-234	65	100
115	GND_IF	-2687.5	-234	65	100
116	GND_IF	-2602.5	-234	65	100
117	D3P	-2517.5	-234	65	100
118	D3N	-2432.5	-234	65	100
119	DASHD	-2347.5	-234	65	100
120	D2P	-2262.5	-234	65	100
121	D2N	-2177.5	-234	65	100

FITIPOWER CONFIDENTIAL
NO DISCLOSURE

122	DASHD	-2092.5	-234	65	100
123	CLKP	-2007.5	-234	65	100
124	CLKN	-1922.5	-234	65	100
125	DASHD	-1837.5	-234	65	100
126	D1P	-1752.5	-234	65	100
127	D1N	-1667.5	-234	65	100
128	DASHD	-1582.5	-234	65	100
129	D0P	-1497.5	-234	65	100
130	D0N	-1412.5	-234	65	100
131	DASHD	-1327.5	-234	65	100
132	VDD_IF	-1242.5	-234	65	100
133	VDD_IF	-1157.5	-234	65	100
134	VDD_IF	-1072.5	-234	65	100
135	VDD_IF	-987.5	-234	65	100
136	REV	-902.5	-234	65	100
137	DASHD	-817.5	-234	65	100
138	VDDLV	-732.5	-234	65	100
139	VDDLV	-647.5	-234	65	100
140	VDDLV	-562.5	-234	65	100
141	VDDLV	-477.5	-234	65	100
142	VDDLV	-392.5	-234	65	100
143	VDDLV	-307.5	-234	65	100
144	TP18	-222.5	-234	65	100
145	TP19	-137.5	-234	65	100
146	DASHD	-52.5	-234	65	100
147	TP20	32.5	-234	65	100
148	TP21	117.5	-234	65	100
149	DASHD	202.5	-234	65	100
150	TP22	287.5	-234	65	100
151	TP23	372.5	-234	65	100
152	DASHD	457.5	-234	65	100
153	TP24	542.5	-234	65	100
154	TP25	627.5	-234	65	100
155	DASHD	712.5	-234	65	100
156	TP26	797.5	-234	65	100
157	TP27	882.5	-234	65	100
158	TP28	967.5	-234	65	100
159	TP29	1052.5	-234	65	100
160	TP30	1137.5	-234	65	100
161	DASHD	1222.5	-234	65	100
162	SHIELDING	1307.5	-234	65	100
163	GAML	1392.5	-234	65	100
164	GAML	1477.5	-234	65	100
165	V8	1562.5	-234	65	100
166	V8	1647.5	-234	65	100
167	V9	1732.5	-234	65	100
168	V9	1817.5	-234	65	100
169	V10	1902.5	-234	65	100
170	V10	1987.5	-234	65	100
171	V11	2072.5	-234	65	100
172	V11	2157.5	-234	65	100
173	V12	2242.5	-234	65	100
174	V12	2327.5	-234	65	100
175	V13	2412.5	-234	65	100
176	V13	2497.5	-234	65	100
177	V14	2582.5	-234	65	100
178	V14	2667.5	-234	65	100
179	SHIELDING	2752.5	-234	65	100
180	AGND	2837.5	-234	65	100
181	AGND	2922.5	-234	65	100
182	AGND	3007.5	-234	65	100

183	AGND	3092.5	-234	65	100
184	SHIELDING	3177.5	-234	65	100
185	AVDD	3262.5	-234	65	100
186	AVDD	3347.5	-234	65	100
187	AVDD	3432.5	-234	65	100
188	AVDD	3517.5	-234	65	100
189	SHIELDING	3602.5	-234	65	100
190	GND	3687.5	-234	65	100
191	GND	3772.5	-234	65	100
192	GND	3857.5	-234	65	100
193	GND	3942.5	-234	65	100
194	SHIELDING	4027.5	-234	65	100
195	VDD	4112.5	-234	65	100
196	VDD	4197.5	-234	65	100
197	VDD	4282.5	-234	65	100
198	VDD	4367.5	-234	65	100
199	SHIELDING	4452.5	-234	65	100
200	DUAL	4537.5	-234	65	100
201	DUAL	4622.5	-234	65	100
202	MASL	4707.5	-234	65	100
203	MASL	4792.5	-234	65	100
204	MASLOC	4877.5	-234	65	100
205	MASLOC	4962.5	-234	65	100
206	CABC_EN[0]	5047.5	-234	65	100
207	CABC_EN[0]	5132.5	-234	65	100
208	CABC_EN[1]	5217.5	-234	65	100
209	CABC_EN[1]	5302.5	-234	65	100
210	OPDRV	5387.5	-234	65	100
211	OPDRV	5472.5	-234	65	100
212	MODE	5557.5	-234	65	100
213	MODE	5642.5	-234	65	100
214	IFSEL	5727.5	-234	65	100
215	IFSEL	5812.5	-234	65	100
216	BIST	5897.5	-234	65	100
217	BIST	5982.5	-234	65	100
218	RES[0]	6067.5	-234	65	100
219	RES[0]	6152.5	-234	65	100
220	RES[1]	6237.5	-234	65	100
221	RES[1]	6322.5	-234	65	100
222	TP_TEST	6407.5	-234	65	100
223	TP_TEST	6492.5	-234	65	100
224	STBYB	6577.5	-234	65	100
225	STBYB	6662.5	-234	65	100
226	GRB	6747.5	-234	65	100
227	GRB	6832.5	-234	65	100
228	SHLR	6917.5	-234	65	100
229	SHLR	7002.5	-234	65	100
230	UPDN	7087.5	-234	65	100
231	UPDN	7172.5	-234	65	100
232	SHIELDING	7257.5	-234	65	100
233	TP31	7342.5	-234	65	100
234	TP32	7427.5	-234	65	100
235	TP33	7512.5	-234	65	100
236	TP34	7597.5	-234	65	100
237	TP35	7682.5	-234	65	100
238	TP36	7767.5	-234	65	100
239	TP37	7852.5	-234	65	100
240	TP38	7937.5	-234	65	100
241	TP39	8022.5	-234	65	100
242	TP40	8107.5	-234	65	100
243	TP41	8192.5	-234	65	100

FITIPOWER CONFIDENTIAL
NO DISCLOSURE

244	TP42	8277.5	-234	65	100
245	TP43	8362.5	-234	65	100
246	TP44	8447.5	-234	65	100
247	SHIELDING	8532.5	-234	65	100
248	VDD	8617.5	-234	65	100
249	VDD	8702.5	-234	65	100
250	VDD	8787.5	-234	65	100
251	VDD	8872.5	-234	65	100
252	SHIELDING	8957.5	-234	65	100
253	GND	9042.5	-234	65	100
254	GND	9127.5	-234	65	100
255	GND	9212.5	-234	65	100
256	GND	9297.5	-234	65	100
257	SHIELDING	9382.5	-234	65	100
258	AVDD	9467.5	-234	65	100
259	AVDD	9552.5	-234	65	100
260	AVDD	9637.5	-234	65	100
261	AVDD	9722.5	-234	65	100
262	SHIELDING	9807.5	-234	65	100
263	AGND	9892.5	-234	65	100
264	AGND	9977.5	-234	65	100
265	AGND	10062.5	-234	65	100
266	AGND	10147.5	-234	65	100
267	SHIELDING	10232.5	-234	65	100
268	TP45	10317.5	-234	65	100
269	VCOMI	10402.5	-234	65	100
270	VCOMI	10487.5	-234	65	100
271	PWR_EN	10572.5	-234	65	100
272	PWR_EN	10657.5	-234	65	100
273	FBL	10742.5	-234	65	100
274	FBL	10827.5	-234	65	100
275	FBH	10912.5	-234	65	100
276	FBH	10997.5	-234	65	100
277	FBA	11082.5	-234	65	100
278	FBA	11167.5	-234	65	100
279	AVDDG	11252.5	-234	65	100
280	AVDDG	11337.5	-234	65	100
281	DRVA	11422.5	-234	65	100
282	DRVA	11507.5	-234	65	100
283	DRVH	11592.5	-234	65	100
284	DRVH	11677.5	-234	65	100
285	DRVL	11762.5	-234	65	100
286	DRVL	11847.5	-234	65	100
287	DRVL_B	11932.5	-234	65	100
288	DRVL_B	12017.5	-234	65	100
289	VCOMO	12102.5	-234	65	100
290	VCOMO	12187.5	-234	65	100
291	COM2_IN	12272.5	-234	65	100
292	COM2_IN	12357.5	-234	65	100
293	STBNL	12303	-72	80	30
294	F_CtrlL	12403	-32	80	30
295	STV2L	12303	8	80	30
296	STV1L	12403	48	80	30
297	CKVL	12303	88	80	30
298	UDL	12403	128	80	30
299	SYNC2L	12303	168	80	30
300	SYNC1L	12403	208	80	30
301	OEVL	12303	248	80	30
302	F_CtrlL	12403	288	80	30
303	SHIELDING	12205	268	30	70
304	COM2_OUT	12155	268	30	70

305	COM2_OUT	12105	268	30	70
306	SHIELDING	12055	268	30	70
307	SO1	12012.5	133	14	80
308	SO2	11997.5	263	14	80
309	SO3	11982.5	133	14	80
310	SO4	11967.5	263	14	80
311	SO5	11952.5	133	14	80
312	SO6	11937.5	263	14	80
313	SO7	11922.5	133	14	80
314	SO8	11907.5	263	14	80
315	SO9	11892.5	133	14	80
316	SO10	11877.5	263	14	80
317	SO11	11862.5	133	14	80
318	SO12	11847.5	263	14	80
319	SO13	11832.5	133	14	80
320	SO14	11817.5	263	14	80
321	SO15	11802.5	133	14	80
322	SO16	11787.5	263	14	80
323	SO17	11772.5	133	14	80
324	SO18	11757.5	263	14	80
325	SO19	11742.5	133	14	80
326	SO20	11727.5	263	14	80
327	SO21	11712.5	133	14	80
328	SO22	11697.5	263	14	80
329	SO23	11682.5	133	14	80
330	SO24	11667.5	263	14	80
331	SO25	11652.5	133	14	80
332	SO26	11637.5	263	14	80
333	SO27	11622.5	133	14	80
334	SO28	11607.5	263	14	80
335	SO29	11592.5	133	14	80
336	SO30	11577.5	263	14	80
337	SO31	11562.5	133	14	80
338	SO32	11547.5	263	14	80
339	SO33	11532.5	133	14	80
340	SO34	11517.5	263	14	80
341	SO35	11502.5	133	14	80
342	SO36	11487.5	263	14	80
343	SO37	11472.5	133	14	80
344	SO38	11457.5	263	14	80
345	SO39	11442.5	133	14	80
346	SO40	11427.5	263	14	80
347	SO41	11412.5	133	14	80
348	SO42	11397.5	263	14	80
349	SO43	11382.5	133	14	80
350	SO44	11367.5	263	14	80
351	SO45	11352.5	133	14	80
352	SO46	11337.5	263	14	80
353	SO47	11322.5	133	14	80
354	SO48	11307.5	263	14	80
355	SO49	11292.5	133	14	80
356	SO50	11277.5	263	14	80
357	SO51	11262.5	133	14	80
358	SO52	11247.5	263	14	80
359	SO53	11232.5	133	14	80
360	SO54	11217.5	263	14	80
361	SO55	11202.5	133	14	80
362	SO56	11187.5	263	14	80
363	SO57	11172.5	133	14	80
364	SO58	11157.5	263	14	80
365	SO59	11142.5	133	14	80

FITIPOWER CONFIDENTIAL
NO DISCLOSURE

366	SO60	11127.5	263	14	80
367	SO61	11112.5	133	14	80
368	SO62	11097.5	263	14	80
369	SO63	11082.5	133	14	80
370	SO64	11067.5	263	14	80
371	SO65	11052.5	133	14	80
372	SO66	11037.5	263	14	80
373	SO67	11022.5	133	14	80
374	SO68	11007.5	263	14	80
375	SO69	10992.5	133	14	80
376	SO70	10977.5	263	14	80
377	SO71	10962.5	133	14	80
378	SO72	10947.5	263	14	80
379	SO73	10932.5	133	14	80
380	SO74	10917.5	263	14	80
381	SO75	10902.5	133	14	80
382	SO76	10887.5	263	14	80
383	SO77	10872.5	133	14	80
384	SO78	10857.5	263	14	80
385	SO79	10842.5	133	14	80
386	SO80	10827.5	263	14	80
387	SO81	10812.5	133	14	80
388	SO82	10797.5	263	14	80
389	SO83	10782.5	133	14	80
390	SO84	10767.5	263	14	80
391	SO85	10752.5	133	14	80
392	SO86	10737.5	263	14	80
393	SO87	10722.5	133	14	80
394	SO88	10707.5	263	14	80
395	SO89	10692.5	133	14	80
396	SO90	10677.5	263	14	80
397	SO91	10662.5	133	14	80
398	SO92	10647.5	263	14	80
399	SO93	10632.5	133	14	80
400	SO94	10617.5	263	14	80
401	SO95	10602.5	133	14	80
402	SO96	10587.5	263	14	80
403	SO97	10572.5	133	14	80
404	SO98	10557.5	263	14	80
405	SO99	10542.5	133	14	80
406	SO100	10527.5	263	14	80
407	SO101	10512.5	133	14	80
408	SO102	10497.5	263	14	80
409	SO103	10482.5	133	14	80
410	SO104	10467.5	263	14	80
411	SO105	10452.5	133	14	80
412	SO106	10437.5	263	14	80
413	SO107	10422.5	133	14	80
414	SO108	10407.5	263	14	80
415	SO109	10392.5	133	14	80
416	SO110	10377.5	263	14	80
417	SO111	10362.5	133	14	80
418	SO112	10347.5	263	14	80
419	SO113	10332.5	133	14	80
420	SO114	10317.5	263	14	80
421	SO115	10302.5	133	14	80
422	SO116	10287.5	263	14	80
423	SO117	10272.5	133	14	80
424	SO118	10257.5	263	14	80
425	SO119	10242.5	133	14	80
426	SO120	10227.5	263	14	80

427	SO121	10212.5	133	14	80
428	SO122	10197.5	263	14	80
429	SO123	10182.5	133	14	80
430	SO124	10167.5	263	14	80
431	SO125	10152.5	133	14	80
432	SO126	10137.5	263	14	80
433	SO127	10122.5	133	14	80
434	SO128	10107.5	263	14	80
435	SO129	10092.5	133	14	80
436	SO130	10077.5	263	14	80
437	SO131	10062.5	133	14	80
438	SO132	10047.5	263	14	80
439	SO133	10032.5	133	14	80
440	SO134	10017.5	263	14	80
441	SO135	10002.5	133	14	80
442	SO136	9987.5	263	14	80
443	SO137	9972.5	133	14	80
444	SO138	9957.5	263	14	80
445	SO139	9942.5	133	14	80
446	SO140	9927.5	263	14	80
447	SO141	9912.5	133	14	80
448	SO142	9897.5	263	14	80
449	SO143	9882.5	133	14	80
450	SO144	9867.5	263	14	80
451	SO145	9852.5	133	14	80
452	SO146	9837.5	263	14	80
453	SO147	9822.5	133	14	80
454	SO148	9807.5	263	14	80
455	SO149	9792.5	133	14	80
456	SO150	9777.5	263	14	80
457	SO151	9762.5	133	14	80
458	SO152	9747.5	263	14	80
459	SO153	9732.5	133	14	80
460	SO154	9717.5	263	14	80
461	SO155	9702.5	133	14	80
462	SO156	9687.5	263	14	80
463	SO157	9672.5	133	14	80
464	SO158	9657.5	263	14	80
465	SO159	9642.5	133	14	80
466	SO160	9627.5	263	14	80
467	SO161	9612.5	133	14	80
468	SO162	9597.5	263	14	80
469	SO163	9582.5	133	14	80
470	SO164	9567.5	263	14	80
471	SO165	9552.5	133	14	80
472	SO166	9537.5	263	14	80
473	SO167	9522.5	133	14	80
474	SO168	9507.5	263	14	80
475	SO169	9492.5	133	14	80
476	SO170	9477.5	263	14	80
477	SO171	9462.5	133	14	80
478	SO172	9447.5	263	14	80
479	SO173	9432.5	133	14	80
480	SO174	9417.5	263	14	80
481	SO175	9402.5	133	14	80
482	SO176	9387.5	263	14	80
483	SO177	9372.5	133	14	80
484	SO178	9357.5	263	14	80
485	SO179	9342.5	133	14	80
486	SO180	9327.5	263	14	80
487	SO181	9312.5	133	14	80

FITIPOWER CONFIDENTIAL
NO DISCLOSURE

488	SO182	9297.5	263	14	80
489	SO183	9282.5	133	14	80
490	SO184	9267.5	263	14	80
491	SO185	9252.5	133	14	80
492	SO186	9237.5	263	14	80
493	SO187	9222.5	133	14	80
494	SO188	9207.5	263	14	80
495	SO189	9192.5	133	14	80
496	SO190	9177.5	263	14	80
497	SO191	9162.5	133	14	80
498	SO192	9147.5	263	14	80
499	SO193	9132.5	133	14	80
500	SO194	9117.5	263	14	80
501	SO195	9102.5	133	14	80
502	SO196	9087.5	263	14	80
503	SO197	9072.5	133	14	80
504	SO198	9057.5	263	14	80
505	SO199	9042.5	133	14	80
506	SO200	9027.5	263	14	80
507	SO201	9012.5	133	14	80
508	SO202	8997.5	263	14	80
509	SO203	8982.5	133	14	80
510	SO204	8967.5	263	14	80
511	SO205	8952.5	133	14	80
512	SO206	8937.5	263	14	80
513	SO207	8922.5	133	14	80
514	SO208	8907.5	263	14	80
515	SO209	8892.5	133	14	80
516	SO210	8877.5	263	14	80
517	SO211	8862.5	133	14	80
518	SO212	8847.5	263	14	80
519	SO213	8832.5	133	14	80
520	SO214	8817.5	263	14	80
521	SO215	8802.5	133	14	80
522	SO216	8787.5	263	14	80
523	SO217	8772.5	133	14	80
524	SO218	8757.5	263	14	80
525	SO219	8742.5	133	14	80
526	SO220	8727.5	263	14	80
527	SO221	8712.5	133	14	80
528	SO222	8697.5	263	14	80
529	SO223	8682.5	133	14	80
530	SO224	8667.5	263	14	80
531	SO225	8652.5	133	14	80
532	SO226	8637.5	263	14	80
533	SO227	8622.5	133	14	80
534	SO228	8607.5	263	14	80
535	SO229	8592.5	133	14	80
536	SO230	8577.5	263	14	80
537	SO231	8562.5	133	14	80
538	SO232	8547.5	263	14	80
539	SO233	8532.5	133	14	80
540	SO234	8517.5	263	14	80
541	SO235	8502.5	133	14	80
542	SO236	8487.5	263	14	80
543	SO237	8472.5	133	14	80
544	SO238	8457.5	263	14	80
545	SO239	8442.5	133	14	80
546	SO240	8427.5	263	14	80
547	SO241	8412.5	133	14	80
548	SO242	8397.5	263	14	80

549	SO243	8382.5	133	14	80
550	SO244	8367.5	263	14	80
551	SO245	8352.5	133	14	80
552	SO246	8337.5	263	14	80
553	SO247	8322.5	133	14	80
554	SO248	8307.5	263	14	80
555	SO249	8292.5	133	14	80
556	SO250	8277.5	263	14	80
557	SO251	8262.5	133	14	80
558	SO252	8247.5	263	14	80
559	SO253	8232.5	133	14	80
560	SO254	8217.5	263	14	80
561	SO255	8202.5	133	14	80
562	SO256	8187.5	263	14	80
563	SO257	8172.5	133	14	80
564	SO258	8157.5	263	14	80
565	SO259	8142.5	133	14	80
566	SO260	8127.5	263	14	80
567	SO261	8112.5	133	14	80
568	SO262	8097.5	263	14	80
569	SO263	8082.5	133	14	80
570	SO264	8067.5	263	14	80
571	SO265	8052.5	133	14	80
572	SO266	8037.5	263	14	80
573	SO267	8022.5	133	14	80
574	SO268	8007.5	263	14	80
575	SO269	7992.5	133	14	80
576	SO270	7977.5	263	14	80
577	SO271	7962.5	133	14	80
578	SO272	7947.5	263	14	80
579	SO273	7932.5	133	14	80
580	SO274	7917.5	263	14	80
581	SO275	7902.5	133	14	80
582	SO276	7887.5	263	14	80
583	SO277	7872.5	133	14	80
584	SO278	7857.5	263	14	80
585	SO279	7842.5	133	14	80
586	SO280	7827.5	263	14	80
587	SO281	7812.5	133	14	80
588	SO282	7797.5	263	14	80
589	SO283	7782.5	133	14	80
590	SO284	7767.5	263	14	80
591	SO285	7752.5	133	14	80
592	SO286	7737.5	263	14	80
593	SO287	7722.5	133	14	80
594	SO288	7707.5	263	14	80
595	SO289	7692.5	133	14	80
596	SO290	7677.5	263	14	80
597	SO291	7662.5	133	14	80
598	SO292	7647.5	263	14	80
599	SO293	7632.5	133	14	80
600	SO294	7617.5	263	14	80
601	SO295	7602.5	133	14	80
602	SO296	7587.5	263	14	80
603	SO297	7572.5	133	14	80
604	SO298	7557.5	263	14	80
605	SO299	7542.5	133	14	80
606	SO300	7527.5	263	14	80
607	SO301	7512.5	133	14	80
608	SO302	7497.5	263	14	80
609	SO303	7482.5	133	14	80

FITIPOWER CONFIDENTIAL
NO DISCLOSURE

610	SO304	7467.5	263	14	80
611	SO305	7452.5	133	14	80
612	SO306	7437.5	263	14	80
613	SO307	7422.5	133	14	80
614	SO308	7407.5	263	14	80
615	SO309	7392.5	133	14	80
616	SO310	7377.5	263	14	80
617	SO311	7362.5	133	14	80
618	SO312	7347.5	263	14	80
619	SO313	7332.5	133	14	80
620	SO314	7317.5	263	14	80
621	SO315	7302.5	133	14	80
622	SO316	7287.5	263	14	80
623	SO317	7272.5	133	14	80
624	SO318	7257.5	263	14	80
625	SO319	7242.5	133	14	80
626	SO320	7227.5	263	14	80
627	SO321	7212.5	133	14	80
628	SO322	7197.5	263	14	80
629	SO323	7182.5	133	14	80
630	SO324	7167.5	263	14	80
631	SO325	7152.5	133	14	80
632	SO326	7137.5	263	14	80
633	SO327	7122.5	133	14	80
634	SO328	7107.5	263	14	80
635	SO329	7092.5	133	14	80
636	SO330	7077.5	263	14	80
637	SO331	7062.5	133	14	80
638	SO332	7047.5	263	14	80
639	SO333	7032.5	133	14	80
640	SO334	7017.5	263	14	80
641	SO335	7002.5	133	14	80
642	SO336	6987.5	263	14	80
643	SO337	6972.5	133	14	80
644	SO338	6957.5	263	14	80
645	SO339	6942.5	133	14	80
646	SO340	6927.5	263	14	80
647	SO341	6912.5	133	14	80
648	SO342	6897.5	263	14	80
649	SO343	6882.5	133	14	80
650	SO344	6867.5	263	14	80
651	SO345	6852.5	133	14	80
652	SO346	6837.5	263	14	80
653	SO347	6822.5	133	14	80
654	SO348	6807.5	263	14	80
655	SO349	6792.5	133	14	80
656	SO350	6777.5	263	14	80
657	SO351	6762.5	133	14	80
658	SO352	6747.5	263	14	80
659	SO353	6732.5	133	14	80
660	SO354	6717.5	263	14	80
661	SO355	6702.5	133	14	80
662	SO356	6687.5	263	14	80
663	SO357	6672.5	133	14	80
664	SO358	6657.5	263	14	80
665	SO359	6642.5	133	14	80
666	SO360	6627.5	263	14	80
667	SO361	6612.5	133	14	80
668	SO362	6597.5	263	14	80
669	SO363	6582.5	133	14	80
670	SO364	6567.5	263	14	80

671	SO365	6552.5	133	14	80
672	SO366	6537.5	263	14	80
673	SO367	6522.5	133	14	80
674	SO368	6507.5	263	14	80
675	SO369	6492.5	133	14	80
676	SO370	6477.5	263	14	80
677	SO371	6462.5	133	14	80
678	SO372	6447.5	263	14	80
679	SO373	6432.5	133	14	80
680	SO374	6417.5	263	14	80
681	SO375	6402.5	133	14	80
682	SO376	6387.5	263	14	80
683	SO377	6372.5	133	14	80
684	SO378	6357.5	263	14	80
685	SO379	6342.5	133	14	80
686	SO380	6327.5	263	14	80
687	SO381	6312.5	133	14	80
688	SO382	6297.5	263	14	80
689	SO383	6282.5	133	14	80
690	SO384	6267.5	263	14	80
691	SO385	6252.5	133	14	80
692	SO386	6237.5	263	14	80
693	SO387	6222.5	133	14	80
694	SO388	6207.5	263	14	80
695	SO389	6192.5	133	14	80
696	SO390	6177.5	263	14	80
697	SO391	6162.5	133	14	80
698	SO392	6147.5	263	14	80
699	SO393	6132.5	133	14	80
700	SO394	6117.5	263	14	80
701	SO395	6102.5	133	14	80
702	SO396	6087.5	263	14	80
703	SO397	6072.5	133	14	80
704	SO398	6057.5	263	14	80
705	SO399	6042.5	133	14	80
706	SO400	6027.5	263	14	80
707	SO401	6012.5	133	14	80
708	SO402	5997.5	263	14	80
709	SO403	5982.5	133	14	80
710	SO404	5967.5	263	14	80
711	SO405	5952.5	133	14	80
712	SO406	5937.5	263	14	80
713	SO407	5922.5	133	14	80
714	SO408	5907.5	263	14	80
715	SO409	5892.5	133	14	80
716	SO410	5877.5	263	14	80
717	SO411	5862.5	133	14	80
718	SO412	5847.5	263	14	80
719	SO413	5832.5	133	14	80
720	SO414	5817.5	263	14	80
721	SO415	5802.5	133	14	80
722	SO416	5787.5	263	14	80
723	SO417	5772.5	133	14	80
724	SO418	5757.5	263	14	80
725	SO419	5742.5	133	14	80
726	SO420	5727.5	263	14	80
727	SO421	5712.5	133	14	80
728	SO422	5697.5	263	14	80
729	SO423	5682.5	133	14	80
730	SO424	5667.5	263	14	80
731	SO425	5652.5	133	14	80

FITIPOWER CONFIDENTIAL
NO DISCLOSURE

732	SO426	5637.5	263	14	80
733	SO427	5622.5	133	14	80
734	SO428	5607.5	263	14	80
735	SO429	5592.5	133	14	80
736	SO430	5577.5	263	14	80
737	SO431	5562.5	133	14	80
738	SO432	5547.5	263	14	80
739	SO433	5532.5	133	14	80
740	SO434	5517.5	263	14	80
741	SO435	5502.5	133	14	80
742	SO436	5487.5	263	14	80
743	SO437	5472.5	133	14	80
744	SO438	5457.5	263	14	80
745	SO439	5442.5	133	14	80
746	SO440	5427.5	263	14	80
747	SO441	5412.5	133	14	80
748	SO442	5397.5	263	14	80
749	SO443	5382.5	133	14	80
750	SO444	5367.5	263	14	80
751	SO445	5352.5	133	14	80
752	SO446	5337.5	263	14	80
753	SO447	5322.5	133	14	80
754	SO448	5307.5	263	14	80
755	SO449	5292.5	133	14	80
756	SO450	5277.5	263	14	80
757	SO451	5262.5	133	14	80
758	SO452	5247.5	263	14	80
759	SO453	5232.5	133	14	80
760	SO454	5217.5	263	14	80
761	SO455	5202.5	133	14	80
762	SO456	5187.5	263	14	80
763	SO457	5172.5	133	14	80
764	SO458	5157.5	263	14	80
765	SO459	5142.5	133	14	80
766	SO460	5127.5	263	14	80
767	SO461	5112.5	133	14	80
768	SO462	5097.5	263	14	80
769	SO463	5082.5	133	14	80
770	SO464	5067.5	263	14	80
771	SO465	5052.5	133	14	80
772	SO466	5037.5	263	14	80
773	SO467	5022.5	133	14	80
774	SO468	5007.5	263	14	80
775	SO469	4992.5	133	14	80
776	SO470	4977.5	263	14	80
777	SO471	4962.5	133	14	80
778	SO472	4947.5	263	14	80
779	SO473	4932.5	133	14	80
780	SO474	4917.5	263	14	80
781	SO475	4902.5	133	14	80
782	SO476	4887.5	263	14	80
783	SO477	4872.5	133	14	80
784	SO478	4857.5	263	14	80
785	SO479	4842.5	133	14	80
786	SO480	4827.5	263	14	80
787	SO481	4812.5	133	14	80
788	SO482	4797.5	263	14	80
789	SO483	4782.5	133	14	80
790	SO484	4767.5	263	14	80
791	SO485	4752.5	133	14	80
792	SO486	4737.5	263	14	80

793	SO487	4722.5	133	14	80
794	SO488	4707.5	263	14	80
795	SO489	4692.5	133	14	80
796	SO490	4677.5	263	14	80
797	SO491	4662.5	133	14	80
798	SO492	4647.5	263	14	80
799	SO493	4632.5	133	14	80
800	SO494	4617.5	263	14	80
801	SO495	4602.5	133	14	80
802	SO496	4587.5	263	14	80
803	SO497	4572.5	133	14	80
804	SO498	4557.5	263	14	80
805	SO499	4542.5	133	14	80
806	SO500	4527.5	263	14	80
807	SO501	4512.5	133	14	80
808	SO502	4497.5	263	14	80
809	SO503	4482.5	133	14	80
810	SO504	4467.5	263	14	80
811	SO505	4452.5	133	14	80
812	SO506	4437.5	263	14	80
813	SO507	4422.5	133	14	80
814	SO508	4407.5	263	14	80
815	SO509	4392.5	133	14	80
816	SO510	4377.5	263	14	80
817	SO511	4362.5	133	14	80
818	SO512	4347.5	263	14	80
819	SO513	4332.5	133	14	80
820	SO514	4317.5	263	14	80
821	SO515	4302.5	133	14	80
822	SO516	4287.5	263	14	80
823	SO517	4272.5	133	14	80
824	SO518	4257.5	263	14	80
825	SO519	4242.5	133	14	80
826	SO520	4227.5	263	14	80
827	SO521	4212.5	133	14	80
828	SO522	4197.5	263	14	80
829	SO523	4182.5	133	14	80
830	SO524	4167.5	263	14	80
831	SO525	4152.5	133	14	80
832	SO526	4137.5	263	14	80
833	SO527	4122.5	133	14	80
834	SO528	4107.5	263	14	80
835	SO529	4092.5	133	14	80
836	SO530	4077.5	263	14	80
837	SO531	4062.5	133	14	80
838	SO532	4047.5	263	14	80
839	SO533	4032.5	133	14	80
840	SO534	4017.5	263	14	80
841	SO535	4002.5	133	14	80
842	SO536	3987.5	263	14	80
843	SO537	3972.5	133	14	80
844	SO538	3957.5	263	14	80
845	SO539	3942.5	133	14	80
846	SO540	3927.5	263	14	80
847	SO541	3912.5	133	14	80
848	SO542	3897.5	263	14	80
849	SO543	3882.5	133	14	80
850	SO544	3867.5	263	14	80
851	SO545	3852.5	133	14	80
852	SO546	3837.5	263	14	80
853	SO547	3822.5	133	14	80

FITIPOWER CONFIDENTIAL
NO DISCLOSURE

854	SO548	3807.5	263	14	80
855	SO549	3792.5	133	14	80
856	SO550	3777.5	263	14	80
857	SO551	3762.5	133	14	80
858	SO552	3747.5	263	14	80
859	SO553	3732.5	133	14	80
860	SO554	3717.5	263	14	80
861	SO555	3702.5	133	14	80
862	SO556	3687.5	263	14	80
863	SO557	3672.5	133	14	80
864	SO558	3657.5	263	14	80
865	SO559	3642.5	133	14	80
866	SO560	3627.5	263	14	80
867	SO561	3612.5	133	14	80
868	SO562	3597.5	263	14	80
869	SO563	3582.5	133	14	80
870	SO564	3567.5	263	14	80
871	SO565	3552.5	133	14	80
872	SO566	3537.5	263	14	80
873	SO567	3522.5	133	14	80
874	SO568	3507.5	263	14	80
875	SO569	3492.5	133	14	80
876	SO570	3477.5	263	14	80
877	SO571	3462.5	133	14	80
878	SO572	3447.5	263	14	80
879	SO573	3432.5	133	14	80
880	SO574	3417.5	263	14	80
881	SO575	3402.5	133	14	80
882	SO576	3387.5	263	14	80
883	SO577	3372.5	133	14	80
884	SO578	3357.5	263	14	80
885	SO579	3342.5	133	14	80
886	SO580	3327.5	263	14	80
887	SO581	3312.5	133	14	80
888	SO582	3297.5	263	14	80
889	SO583	3282.5	133	14	80
890	SO584	3267.5	263	14	80
891	SO585	3252.5	133	14	80
892	SO586	3237.5	263	14	80
893	SO587	3222.5	133	14	80
894	SO588	3207.5	263	14	80
895	SO589	3192.5	133	14	80
896	SO590	3177.5	263	14	80
897	SO591	3162.5	133	14	80
898	SO592	3147.5	263	14	80
899	SO593	3132.5	133	14	80
900	SO594	3117.5	263	14	80
901	SO595	3102.5	133	14	80
902	SO596	3087.5	263	14	80
903	SO597	3072.5	133	14	80
904	SO598	3057.5	263	14	80
905	SO599	3042.5	133	14	80
906	SO600	3027.5	263	14	80
907	SO601	3012.5	133	14	80
908	SO602	2997.5	263	14	80
909	SO603	2982.5	133	14	80
910	SO604	2967.5	263	14	80
911	SO605	2952.5	133	14	80
912	SO606	2937.5	263	14	80
913	SO607	2922.5	133	14	80
914	SO608	2907.5	263	14	80

915	SO609	2892.5	133	14	80
916	SO610	2877.5	263	14	80
917	SO611	2862.5	133	14	80
918	SO612	2847.5	263	14	80
919	SO613	2832.5	133	14	80
920	SO614	2817.5	263	14	80
921	SO615	2802.5	133	14	80
922	SO616	2787.5	263	14	80
923	SO617	2772.5	133	14	80
924	SO618	2757.5	263	14	80
925	SO619	2742.5	133	14	80
926	SO620	2727.5	263	14	80
927	SO621	2712.5	133	14	80
928	SO622	2697.5	263	14	80
929	SO623	2682.5	133	14	80
930	SO624	2667.5	263	14	80
931	SO625	2652.5	133	14	80
932	SO626	2637.5	263	14	80
933	SO627	2622.5	133	14	80
934	SO628	2607.5	263	14	80
935	SO629	2592.5	133	14	80
936	SO630	2577.5	263	14	80
937	SO631	2562.5	133	14	80
938	SO632	2547.5	263	14	80
939	SO633	2532.5	133	14	80
940	SO634	2517.5	263	14	80
941	SO635	2502.5	133	14	80
942	SO636	2487.5	263	14	80
943	SO637	2472.5	133	14	80
944	SO638	2457.5	263	14	80
945	SO639	2442.5	133	14	80
946	SO640	2427.5	263	14	80
947	SO641	2412.5	133	14	80
948	SO642	2397.5	263	14	80
949	SO643	2382.5	133	14	80
950	SO644	2367.5	263	14	80
951	SO645	2352.5	133	14	80
952	SO646	2337.5	263	14	80
953	SO647	2322.5	133	14	80
954	SO648	2307.5	263	14	80
955	SO649	2292.5	133	14	80
956	SO650	2277.5	263	14	80
957	SO651	2262.5	133	14	80
958	SO652	2247.5	263	14	80
959	SO653	2232.5	133	14	80
960	SO654	2217.5	263	14	80
961	SO655	2202.5	133	14	80
962	SO656	2187.5	263	14	80
963	SO657	2172.5	133	14	80
964	SO658	2157.5	263	14	80
965	SO659	2142.5	133	14	80
966	SO660	2127.5	263	14	80
967	SO661	2112.5	133	14	80
968	SO662	2097.5	263	14	80
969	SO663	2082.5	133	14	80
970	SO664	2067.5	263	14	80
971	SO665	2052.5	133	14	80
972	SO666	2037.5	263	14	80
973	SO667	2022.5	133	14	80
974	SO668	2007.5	263	14	80
975	SO669	1992.5	133	14	80

FITIPOWER CONFIDENTIAL
NO DISCLOSURE

976	SO670	1977.5	263	14	80
977	SO671	1962.5	133	14	80
978	SO672	1947.5	263	14	80
979	SO673	1932.5	133	14	80
980	SO674	1917.5	263	14	80
981	SO675	1902.5	133	14	80
982	SO676	1887.5	263	14	80
983	SO677	1872.5	133	14	80
984	SO678	1857.5	263	14	80
985	SO679	1842.5	133	14	80
986	SO680	1827.5	263	14	80
987	SO681	1812.5	133	14	80
988	SO682	1797.5	263	14	80
989	SO683	1782.5	133	14	80
990	SO684	1767.5	263	14	80
991	SO685	1752.5	133	14	80
992	SO686	1737.5	263	14	80
993	SO687	1722.5	133	14	80
994	SO688	1707.5	263	14	80
995	SO689	1692.5	133	14	80
996	SO690	1677.5	263	14	80
997	SO691	1662.5	133	14	80
998	SO692	1647.5	263	14	80
999	SO693	1632.5	133	14	80
1000	SO694	1617.5	263	14	80
1001	SO695	1602.5	133	14	80
1002	SO696	1587.5	263	14	80
1003	SO697	1572.5	133	14	80
1004	SO698	1557.5	263	14	80
1005	SO699	1542.5	133	14	80
1006	SO700	1527.5	263	14	80
1007	SO701	1512.5	133	14	80
1008	SO702	1497.5	263	14	80
1009	SO703	1482.5	133	14	80
1010	SO704	1467.5	263	14	80
1011	SO705	1452.5	133	14	80
1012	SO706	1437.5	263	14	80
1013	SO707	1422.5	133	14	80
1014	SO708	1407.5	263	14	80
1015	SO709	1392.5	133	14	80
1016	SO710	1377.5	263	14	80
1017	SO711	1362.5	133	14	80
1018	SO712	1347.5	263	14	80
1019	SO713	1332.5	133	14	80
1020	SO714	1317.5	263	14	80
1021	SO715	1302.5	133	14	80
1022	SO716	1287.5	263	14	80
1023	SO717	1272.5	133	14	80
1024	SO718	1257.5	263	14	80
1025	SO719	1242.5	133	14	80
1026	SO720	1227.5	263	14	80
1027	SO721	1212.5	133	14	80
1028	SO722	1197.5	263	14	80
1029	SO723	1182.5	133	14	80
1030	SO724	1167.5	263	14	80
1031	SO725	1152.5	133	14	80
1032	SO726	1137.5	263	14	80
1033	SO727	1122.5	133	14	80
1034	SO728	1107.5	263	14	80
1035	SO729	1092.5	133	14	80
1036	SO730	1077.5	263	14	80

1037	SO731	1062.5	133	14	80
1038	SO732	1047.5	263	14	80
1039	SO733	1032.5	133	14	80
1040	SO734	1017.5	263	14	80
1041	SO735	1002.5	133	14	80
1042	SO736	987.5	263	14	80
1043	SO737	972.5	133	14	80
1044	SO738	957.5	263	14	80
1045	SO739	942.5	133	14	80
1046	SO740	927.5	263	14	80
1047	SO741	912.5	133	14	80
1048	SO742	897.5	263	14	80
1049	SO743	882.5	133	14	80
1050	SO744	867.5	263	14	80
1051	SO745	852.5	133	14	80
1052	SO746	837.5	263	14	80
1053	SO747	822.5	133	14	80
1054	SO748	807.5	263	14	80
1055	SO749	792.5	133	14	80
1056	SO750	777.5	263	14	80
1057	SO751	762.5	133	14	80
1058	SO752	747.5	263	14	80
1059	SO753	732.5	133	14	80
1060	SO754	717.5	263	14	80
1061	SO755	702.5	133	14	80
1062	SO756	687.5	263	14	80
1063	SO757	672.5	133	14	80
1064	SO758	657.5	263	14	80
1065	SO759	642.5	133	14	80
1066	SO760	627.5	263	14	80
1067	SO761	612.5	133	14	80
1068	SO762	597.5	263	14	80
1069	SO763	582.5	133	14	80
1070	SO764	567.5	263	14	80
1071	SO765	552.5	133	14	80
1072	SO766	537.5	263	14	80
1073	SO767	522.5	133	14	80
1074	SO768	507.5	263	14	80
1075	SHIELDING	455	268	30	70
1076	SHIELDING	405	268	30	70
1077	SHIELDING	355	268	30	70
1078	SHIELDING	50	268	30	70
1079	SHIELDING	0	268	30	70
1080	SHIELDING	-50	268	30	70
1081	SHIELDING	-355	268	30	70
1082	SHIELDING	-405	268	30	70
1083	SHIELDING	-455	268	30	70
1084	SO769	-507.5	263	14	80
1085	SO770	-522.5	133	14	80
1086	SO771	-537.5	263	14	80
1087	SO772	-552.5	133	14	80
1088	SO773	-567.5	263	14	80
1089	SO774	-582.5	133	14	80
1090	SO775	-597.5	263	14	80
1091	SO776	-612.5	133	14	80
1092	SO777	-627.5	263	14	80
1093	SO778	-642.5	133	14	80
1094	SO779	-657.5	263	14	80
1095	SO780	-672.5	133	14	80
1096	SO781	-687.5	263	14	80
1097	SO782	-702.5	133	14	80

FITIPOWER CONFIDENTIAL
NO DISCLOSURE

1098	SO783	-717.5	263	14	80
1099	SO784	-732.5	133	14	80
1100	SO785	-747.5	263	14	80
1101	SO786	-762.5	133	14	80
1102	SO787	-777.5	263	14	80
1103	SO788	-792.5	133	14	80
1104	SO789	-807.5	263	14	80
1105	SO790	-822.5	133	14	80
1106	SO791	-837.5	263	14	80
1107	SO792	-852.5	133	14	80
1108	SO793	-867.5	263	14	80
1109	SO794	-882.5	133	14	80
1110	SO795	-897.5	263	14	80
1111	SO796	-912.5	133	14	80
1112	SO797	-927.5	263	14	80
1113	SO798	-942.5	133	14	80
1114	SO799	-957.5	263	14	80
1115	SO800	-972.5	133	14	80
1116	SO801	-987.5	263	14	80
1117	SO802	-1002.5	133	14	80
1118	SO803	-1017.5	263	14	80
1119	SO804	-1032.5	133	14	80
1120	SO805	-1047.5	263	14	80
1121	SO806	-1062.5	133	14	80
1122	SO807	-1077.5	263	14	80
1123	SO808	-1092.5	133	14	80
1124	SO809	-1107.5	263	14	80
1125	SO810	-1122.5	133	14	80
1126	SO811	-1137.5	263	14	80
1127	SO812	-1152.5	133	14	80
1128	SO813	-1167.5	263	14	80
1129	SO814	-1182.5	133	14	80
1130	SO815	-1197.5	263	14	80
1131	SO816	-1212.5	133	14	80
1132	SO817	-1227.5	263	14	80
1133	SO818	-1242.5	133	14	80
1134	SO819	-1257.5	263	14	80
1135	SO820	-1272.5	133	14	80
1136	SO821	-1287.5	263	14	80
1137	SO822	-1302.5	133	14	80
1138	SO823	-1317.5	263	14	80
1139	SO824	-1332.5	133	14	80
1140	SO825	-1347.5	263	14	80
1141	SO826	-1362.5	133	14	80
1142	SO827	-1377.5	263	14	80
1143	SO828	-1392.5	133	14	80
1144	SO829	-1407.5	263	14	80
1145	SO830	-1422.5	133	14	80
1146	SO831	-1437.5	263	14	80
1147	SO832	-1452.5	133	14	80
1148	SO833	-1467.5	263	14	80
1149	SO834	-1482.5	133	14	80
1150	SO835	-1497.5	263	14	80
1151	SO836	-1512.5	133	14	80
1152	SO837	-1527.5	263	14	80
1153	SO838	-1542.5	133	14	80
1154	SO839	-1557.5	263	14	80
1155	SO840	-1572.5	133	14	80
1156	SO841	-1587.5	263	14	80
1157	SO842	-1602.5	133	14	80
1158	SO843	-1617.5	263	14	80

1159	SO844	-1632.5	133	14	80
1160	SO845	-1647.5	263	14	80
1161	SO846	-1662.5	133	14	80
1162	SO847	-1677.5	263	14	80
1163	SO848	-1692.5	133	14	80
1164	SO849	-1707.5	263	14	80
1165	SO850	-1722.5	133	14	80
1166	SO851	-1737.5	263	14	80
1167	SO852	-1752.5	133	14	80
1168	SO853	-1767.5	263	14	80
1169	SO854	-1782.5	133	14	80
1170	SO855	-1797.5	263	14	80
1171	SO856	-1812.5	133	14	80
1172	SO857	-1827.5	263	14	80
1173	SO858	-1842.5	133	14	80
1174	SO859	-1857.5	263	14	80
1175	SO860	-1872.5	133	14	80
1176	SO861	-1887.5	263	14	80
1177	SO862	-1902.5	133	14	80
1178	SO863	-1917.5	263	14	80
1179	SO864	-1932.5	133	14	80
1180	SO865	-1947.5	263	14	80
1181	SO866	-1962.5	133	14	80
1182	SO867	-1977.5	263	14	80
1183	SO868	-1992.5	133	14	80
1184	SO869	-2007.5	263	14	80
1185	SO870	-2022.5	133	14	80
1186	SO871	-2037.5	263	14	80
1187	SO872	-2052.5	133	14	80
1188	SO873	-2067.5	263	14	80
1189	SO874	-2082.5	133	14	80
1190	SO875	-2097.5	263	14	80
1191	SO876	-2112.5	133	14	80
1192	SO877	-2127.5	263	14	80
1193	SO878	-2142.5	133	14	80
1194	SO879	-2157.5	263	14	80
1195	SO880	-2172.5	133	14	80
1196	SO881	-2187.5	263	14	80
1197	SO882	-2202.5	133	14	80
1198	SO883	-2217.5	263	14	80
1199	SO884	-2232.5	133	14	80
1200	SO885	-2247.5	263	14	80
1201	SO886	-2262.5	133	14	80
1202	SO887	-2277.5	263	14	80
1203	SO888	-2292.5	133	14	80
1204	SO889	-2307.5	263	14	80
1205	SO890	-2322.5	133	14	80
1206	SO891	-2337.5	263	14	80
1207	SO892	-2352.5	133	14	80
1208	SO893	-2367.5	263	14	80
1209	SO894	-2382.5	133	14	80
1210	SO895	-2397.5	263	14	80
1211	SO896	-2412.5	133	14	80
1212	SO897	-2427.5	263	14	80
1213	SO898	-2442.5	133	14	80
1214	SO899	-2457.5	263	14	80
1215	SO900	-2472.5	133	14	80
1216	SO901	-2487.5	263	14	80
1217	SO902	-2502.5	133	14	80
1218	SO903	-2517.5	263	14	80
1219	SO904	-2532.5	133	14	80

FITIPOWER CONFIDENTIAL
NO DISCLOSURE

1220	SO905	-2547.5	263	14	80
1221	SO906	-2562.5	133	14	80
1222	SO907	-2577.5	263	14	80
1223	SO908	-2592.5	133	14	80
1224	SO909	-2607.5	263	14	80
1225	SO910	-2622.5	133	14	80
1226	SO911	-2637.5	263	14	80
1227	SO912	-2652.5	133	14	80
1228	SO913	-2667.5	263	14	80
1229	SO914	-2682.5	133	14	80
1230	SO915	-2697.5	263	14	80
1231	SO916	-2712.5	133	14	80
1232	SO917	-2727.5	263	14	80
1233	SO918	-2742.5	133	14	80
1234	SO919	-2757.5	263	14	80
1235	SO920	-2772.5	133	14	80
1236	SO921	-2787.5	263	14	80
1237	SO922	-2802.5	133	14	80
1238	SO923	-2817.5	263	14	80
1239	SO924	-2832.5	133	14	80
1240	SO925	-2847.5	263	14	80
1241	SO926	-2862.5	133	14	80
1242	SO927	-2877.5	263	14	80
1243	SO928	-2892.5	133	14	80
1244	SO929	-2907.5	263	14	80
1245	SO930	-2922.5	133	14	80
1246	SO931	-2937.5	263	14	80
1247	SO932	-2952.5	133	14	80
1248	SO933	-2967.5	263	14	80
1249	SO934	-2982.5	133	14	80
1250	SO935	-2997.5	263	14	80
1251	SO936	-3012.5	133	14	80
1252	SO937	-3027.5	263	14	80
1253	SO938	-3042.5	133	14	80
1254	SO939	-3057.5	263	14	80
1255	SO940	-3072.5	133	14	80
1256	SO941	-3087.5	263	14	80
1257	SO942	-3102.5	133	14	80
1258	SO943	-3117.5	263	14	80
1259	SO944	-3132.5	133	14	80
1260	SO945	-3147.5	263	14	80
1261	SO946	-3162.5	133	14	80
1262	SO947	-3177.5	263	14	80
1263	SO948	-3192.5	133	14	80
1264	SO949	-3207.5	263	14	80
1265	SO950	-3222.5	133	14	80
1266	SO951	-3237.5	263	14	80
1267	SO952	-3252.5	133	14	80
1268	SO953	-3267.5	263	14	80
1269	SO954	-3282.5	133	14	80
1270	SO955	-3297.5	263	14	80
1271	SO956	-3312.5	133	14	80
1272	SO957	-3327.5	263	14	80
1273	SO958	-3342.5	133	14	80
1274	SO959	-3357.5	263	14	80
1275	SO960	-3372.5	133	14	80
1276	SO961	-3387.5	263	14	80
1277	SO962	-3402.5	133	14	80
1278	SO963	-3417.5	263	14	80
1279	SO964	-3432.5	133	14	80
1280	SO965	-3447.5	263	14	80

1281	SO966	-3462.5	133	14	80
1282	SO967	-3477.5	263	14	80
1283	SO968	-3492.5	133	14	80
1284	SO969	-3507.5	263	14	80
1285	SO970	-3522.5	133	14	80
1286	SO971	-3537.5	263	14	80
1287	SO972	-3552.5	133	14	80
1288	SO973	-3567.5	263	14	80
1289	SO974	-3582.5	133	14	80
1290	SO975	-3597.5	263	14	80
1291	SO976	-3612.5	133	14	80
1292	SO977	-3627.5	263	14	80
1293	SO978	-3642.5	133	14	80
1294	SO979	-3657.5	263	14	80
1295	SO980	-3672.5	133	14	80
1296	SO981	-3687.5	263	14	80
1297	SO982	-3702.5	133	14	80
1298	SO983	-3717.5	263	14	80
1299	SO984	-3732.5	133	14	80
1300	SO985	-3747.5	263	14	80
1301	SO986	-3762.5	133	14	80
1302	SO987	-3777.5	263	14	80
1303	SO988	-3792.5	133	14	80
1304	SO989	-3807.5	263	14	80
1305	SO990	-3822.5	133	14	80
1306	SO991	-3837.5	263	14	80
1307	SO992	-3852.5	133	14	80
1308	SO993	-3867.5	263	14	80
1309	SO994	-3882.5	133	14	80
1310	SO995	-3897.5	263	14	80
1311	SO996	-3912.5	133	14	80
1312	SO997	-3927.5	263	14	80
1313	SO998	-3942.5	133	14	80
1314	SO999	-3957.5	263	14	80
1315	SO1000	-3972.5	133	14	80
1316	SO1001	-3987.5	263	14	80
1317	SO1002	-4002.5	133	14	80
1318	SO1003	-4017.5	263	14	80
1319	SO1004	-4032.5	133	14	80
1320	SO1005	-4047.5	263	14	80
1321	SO1006	-4062.5	133	14	80
1322	SO1007	-4077.5	263	14	80
1323	SO1008	-4092.5	133	14	80
1324	SO1009	-4107.5	263	14	80
1325	SO1010	-4122.5	133	14	80
1326	SO1011	-4137.5	263	14	80
1327	SO1012	-4152.5	133	14	80
1328	SO1013	-4167.5	263	14	80
1329	SO1014	-4182.5	133	14	80
1330	SO1015	-4197.5	263	14	80
1331	SO1016	-4212.5	133	14	80
1332	SO1017	-4227.5	263	14	80
1333	SO1018	-4242.5	133	14	80
1334	SO1019	-4257.5	263	14	80
1335	SO1020	-4272.5	133	14	80
1336	SO1021	-4287.5	263	14	80
1337	SO1022	-4302.5	133	14	80
1338	SO1023	-4317.5	263	14	80
1339	SO1024	-4332.5	133	14	80
1340	SO1025	-4347.5	263	14	80
1341	SO1026	-4362.5	133	14	80

FITIPOWER CONFIDENTIAL
NO DISCLOSURE

1342	SO1027	-4377.5	263	14	80
1343	SO1028	-4392.5	133	14	80
1344	SO1029	-4407.5	263	14	80
1345	SO1030	-4422.5	133	14	80
1346	SO1031	-4437.5	263	14	80
1347	SO1032	-4452.5	133	14	80
1348	SO1033	-4467.5	263	14	80
1349	SO1034	-4482.5	133	14	80
1350	SO1035	-4497.5	263	14	80
1351	SO1036	-4512.5	133	14	80
1352	SO1037	-4527.5	263	14	80
1353	SO1038	-4542.5	133	14	80
1354	SO1039	-4557.5	263	14	80
1355	SO1040	-4572.5	133	14	80
1356	SO1041	-4587.5	263	14	80
1357	SO1042	-4602.5	133	14	80
1358	SO1043	-4617.5	263	14	80
1359	SO1044	-4632.5	133	14	80
1360	SO1045	-4647.5	263	14	80
1361	SO1046	-4662.5	133	14	80
1362	SO1047	-4677.5	263	14	80
1363	SO1048	-4692.5	133	14	80
1364	SO1049	-4707.5	263	14	80
1365	SO1050	-4722.5	133	14	80
1366	SO1051	-4737.5	263	14	80
1367	SO1052	-4752.5	133	14	80
1368	SO1053	-4767.5	263	14	80
1369	SO1054	-4782.5	133	14	80
1370	SO1055	-4797.5	263	14	80
1371	SO1056	-4812.5	133	14	80
1372	SO1057	-4827.5	263	14	80
1373	SO1058	-4842.5	133	14	80
1374	SO1059	-4857.5	263	14	80
1375	SO1060	-4872.5	133	14	80
1376	SO1061	-4887.5	263	14	80
1377	SO1062	-4902.5	133	14	80
1378	SO1063	-4917.5	263	14	80
1379	SO1064	-4932.5	133	14	80
1380	SO1065	-4947.5	263	14	80
1381	SO1066	-4962.5	133	14	80
1382	SO1067	-4977.5	263	14	80
1383	SO1068	-4992.5	133	14	80
1384	SO1069	-5007.5	263	14	80
1385	SO1070	-5022.5	133	14	80
1386	SO1071	-5037.5	263	14	80
1387	SO1072	-5052.5	133	14	80
1388	SO1073	-5067.5	263	14	80
1389	SO1074	-5082.5	133	14	80
1390	SO1075	-5097.5	263	14	80
1391	SO1076	-5112.5	133	14	80
1392	SO1077	-5127.5	263	14	80
1393	SO1078	-5142.5	133	14	80
1394	SO1079	-5157.5	263	14	80
1395	SO1080	-5172.5	133	14	80
1396	SO1081	-5187.5	263	14	80
1397	SO1082	-5202.5	133	14	80
1398	SO1083	-5217.5	263	14	80
1399	SO1084	-5232.5	133	14	80
1400	SO1085	-5247.5	263	14	80
1401	SO1086	-5262.5	133	14	80
1402	SO1087	-5277.5	263	14	80

1403	SO1088	-5292.5	133	14	80
1404	SO1089	-5307.5	263	14	80
1405	SO1090	-5322.5	133	14	80
1406	SO1091	-5337.5	263	14	80
1407	SO1092	-5352.5	133	14	80
1408	SO1093	-5367.5	263	14	80
1409	SO1094	-5382.5	133	14	80
1410	SO1095	-5397.5	263	14	80
1411	SO1096	-5412.5	133	14	80
1412	SO1097	-5427.5	263	14	80
1413	SO1098	-5442.5	133	14	80
1414	SO1099	-5457.5	263	14	80
1415	SO1100	-5472.5	133	14	80
1416	SO1101	-5487.5	263	14	80
1417	SO1102	-5502.5	133	14	80
1418	SO1103	-5517.5	263	14	80
1419	SO1104	-5532.5	133	14	80
1420	SO1105	-5547.5	263	14	80
1421	SO1106	-5562.5	133	14	80
1422	SO1107	-5577.5	263	14	80
1423	SO1108	-5592.5	133	14	80
1424	SO1109	-5607.5	263	14	80
1425	SO1110	-5622.5	133	14	80
1426	SO1111	-5637.5	263	14	80
1427	SO1112	-5652.5	133	14	80
1428	SO1113	-5667.5	263	14	80
1429	SO1114	-5682.5	133	14	80
1430	SO1115	-5697.5	263	14	80
1431	SO1116	-5712.5	133	14	80
1432	SO1117	-5727.5	263	14	80
1433	SO1118	-5742.5	133	14	80
1434	SO1119	-5757.5	263	14	80
1435	SO1120	-5772.5	133	14	80
1436	SO1121	-5787.5	263	14	80
1437	SO1122	-5802.5	133	14	80
1438	SO1123	-5817.5	263	14	80
1439	SO1124	-5832.5	133	14	80
1440	SO1125	-5847.5	263	14	80
1441	SO1126	-5862.5	133	14	80
1442	SO1127	-5877.5	263	14	80
1443	SO1128	-5892.5	133	14	80
1444	SO1129	-5907.5	263	14	80
1445	SO1130	-5922.5	133	14	80
1446	SO1131	-5937.5	263	14	80
1447	SO1132	-5952.5	133	14	80
1448	SO1133	-5967.5	263	14	80
1449	SO1134	-5982.5	133	14	80
1450	SO1135	-5997.5	263	14	80
1451	SO1136	-6012.5	133	14	80
1452	SO1137	-6027.5	263	14	80
1453	SO1138	-6042.5	133	14	80
1454	SO1139	-6057.5	263	14	80
1455	SO1140	-6072.5	133	14	80
1456	SO1141	-6087.5	263	14	80
1457	SO1142	-6102.5	133	14	80
1458	SO1143	-6117.5	263	14	80
1459	SO1144	-6132.5	133	14	80
1460	SO1145	-6147.5	263	14	80
1461	SO1146	-6162.5	133	14	80
1462	SO1147	-6177.5	263	14	80
1463	SO1148	-6192.5	133	14	80

FITIPOWER CONFIDENTIAL
NO DISCLOSURE

1464	SO1149	-6207.5	263	14	80
1465	SO1150	-6222.5	133	14	80
1466	SO1151	-6237.5	263	14	80
1467	SO1152	-6252.5	133	14	80
1468	SO1153	-6267.5	263	14	80
1469	SO1154	-6282.5	133	14	80
1470	SO1155	-6297.5	263	14	80
1471	SO1156	-6312.5	133	14	80
1472	SO1157	-6327.5	263	14	80
1473	SO1158	-6342.5	133	14	80
1474	SO1159	-6357.5	263	14	80
1475	SO1160	-6372.5	133	14	80
1476	SO1161	-6387.5	263	14	80
1477	SO1162	-6402.5	133	14	80
1478	SO1163	-6417.5	263	14	80
1479	SO1164	-6432.5	133	14	80
1480	SO1165	-6447.5	263	14	80
1481	SO1166	-6462.5	133	14	80
1482	SO1167	-6477.5	263	14	80
1483	SO1168	-6492.5	133	14	80
1484	SO1169	-6507.5	263	14	80
1485	SO1170	-6522.5	133	14	80
1486	SO1171	-6537.5	263	14	80
1487	SO1172	-6552.5	133	14	80
1488	SO1173	-6567.5	263	14	80
1489	SO1174	-6582.5	133	14	80
1490	SO1175	-6597.5	263	14	80
1491	SO1176	-6612.5	133	14	80
1492	SO1177	-6627.5	263	14	80
1493	SO1178	-6642.5	133	14	80
1494	SO1179	-6657.5	263	14	80
1495	SO1180	-6672.5	133	14	80
1496	SO1181	-6687.5	263	14	80
1497	SO1182	-6702.5	133	14	80
1498	SO1183	-6717.5	263	14	80
1499	SO1184	-6732.5	133	14	80
1500	SO1185	-6747.5	263	14	80
1501	SO1186	-6762.5	133	14	80
1502	SO1187	-6777.5	263	14	80
1503	SO1188	-6792.5	133	14	80
1504	SO1189	-6807.5	263	14	80
1505	SO1190	-6822.5	133	14	80
1506	SO1191	-6837.5	263	14	80
1507	SO1192	-6852.5	133	14	80
1508	SO1193	-6867.5	263	14	80
1509	SO1194	-6882.5	133	14	80
1510	SO1195	-6897.5	263	14	80
1511	SO1196	-6912.5	133	14	80
1512	SO1197	-6927.5	263	14	80
1513	SO1198	-6942.5	133	14	80
1514	SO1199	-6957.5	263	14	80
1515	SO1200	-6972.5	133	14	80
1516	SO1201	-6987.5	263	14	80
1517	SO1202	-7002.5	133	14	80
1518	SO1203	-7017.5	263	14	80
1519	SO1204	-7032.5	133	14	80
1520	SO1205	-7047.5	263	14	80
1521	SO1206	-7062.5	133	14	80
1522	SO1207	-7077.5	263	14	80
1523	SO1208	-7092.5	133	14	80
1524	SO1209	-7107.5	263	14	80

1525	SO1210	-7122.5	133	14	80
1526	SO1211	-7137.5	263	14	80
1527	SO1212	-7152.5	133	14	80
1528	SO1213	-7167.5	263	14	80
1529	SO1214	-7182.5	133	14	80
1530	SO1215	-7197.5	263	14	80
1531	SO1216	-7212.5	133	14	80
1532	SO1217	-7227.5	263	14	80
1533	SO1218	-7242.5	133	14	80
1534	SO1219	-7257.5	263	14	80
1535	SO1220	-7272.5	133	14	80
1536	SO1221	-7287.5	263	14	80
1537	SO1222	-7302.5	133	14	80
1538	SO1223	-7317.5	263	14	80
1539	SO1224	-7332.5	133	14	80
1540	SO1225	-7347.5	263	14	80
1541	SO1226	-7362.5	133	14	80
1542	SO1227	-7377.5	263	14	80
1543	SO1228	-7392.5	133	14	80
1544	SO1229	-7407.5	263	14	80
1545	SO1230	-7422.5	133	14	80
1546	SO1231	-7437.5	263	14	80
1547	SO1232	-7452.5	133	14	80
1548	SO1233	-7467.5	263	14	80
1549	SO1234	-7482.5	133	14	80
1550	SO1235	-7497.5	263	14	80
1551	SO1236	-7512.5	133	14	80
1552	SO1237	-7527.5	263	14	80
1553	SO1238	-7542.5	133	14	80
1554	SO1239	-7557.5	263	14	80
1555	SO1240	-7572.5	133	14	80
1556	SO1241	-7587.5	263	14	80
1557	SO1242	-7602.5	133	14	80
1558	SO1243	-7617.5	263	14	80
1559	SO1244	-7632.5	133	14	80
1560	SO1245	-7647.5	263	14	80
1561	SO1246	-7662.5	133	14	80
1562	SO1247	-7677.5	263	14	80
1563	SO1248	-7692.5	133	14	80
1564	SO1249	-7707.5	263	14	80
1565	SO1250	-7722.5	133	14	80
1566	SO1251	-7737.5	263	14	80
1567	SO1252	-7752.5	133	14	80
1568	SO1253	-7767.5	263	14	80
1569	SO1254	-7782.5	133	14	80
1570	SO1255	-7797.5	263	14	80
1571	SO1256	-7812.5	133	14	80
1572	SO1257	-7827.5	263	14	80
1573	SO1258	-7842.5	133	14	80
1574	SO1259	-7857.5	263	14	80
1575	SO1260	-7872.5	133	14	80
1576	SO1261	-7887.5	263	14	80
1577	SO1262	-7902.5	133	14	80
1578	SO1263	-7917.5	263	14	80
1579	SO1264	-7932.5	133	14	80
1580	SO1265	-7947.5	263	14	80
1581	SO1266	-7962.5	133	14	80
1582	SO1267	-7977.5	263	14	80
1583	SO1268	-7992.5	133	14	80
1584	SO1269	-8007.5	263	14	80
1585	SO1270	-8022.5	133	14	80

FITIPOWER CONFIDENTIAL
NO DISCLOSURE

1586	SO1271	-8037.5	263	14	80
1587	SO1272	-8052.5	133	14	80
1588	SO1273	-8067.5	263	14	80
1589	SO1274	-8082.5	133	14	80
1590	SO1275	-8097.5	263	14	80
1591	SO1276	-8112.5	133	14	80
1592	SO1277	-8127.5	263	14	80
1593	SO1278	-8142.5	133	14	80
1594	SO1279	-8157.5	263	14	80
1595	SO1280	-8172.5	133	14	80
1596	SO1281	-8187.5	263	14	80
1597	SO1282	-8202.5	133	14	80
1598	SO1283	-8217.5	263	14	80
1599	SO1284	-8232.5	133	14	80
1600	SO1285	-8247.5	263	14	80
1601	SO1286	-8262.5	133	14	80
1602	SO1287	-8277.5	263	14	80
1603	SO1288	-8292.5	133	14	80
1604	SO1289	-8307.5	263	14	80
1605	SO1290	-8322.5	133	14	80
1606	SO1291	-8337.5	263	14	80
1607	SO1292	-8352.5	133	14	80
1608	SO1293	-8367.5	263	14	80
1609	SO1294	-8382.5	133	14	80
1610	SO1295	-8397.5	263	14	80
1611	SO1296	-8412.5	133	14	80
1612	SO1297	-8427.5	263	14	80
1613	SO1298	-8442.5	133	14	80
1614	SO1299	-8457.5	263	14	80
1615	SO1300	-8472.5	133	14	80
1616	SO1301	-8487.5	263	14	80
1617	SO1302	-8502.5	133	14	80
1618	SO1303	-8517.5	263	14	80
1619	SO1304	-8532.5	133	14	80
1620	SO1305	-8547.5	263	14	80
1621	SO1306	-8562.5	133	14	80
1622	SO1307	-8577.5	263	14	80
1623	SO1308	-8592.5	133	14	80
1624	SO1309	-8607.5	263	14	80
1625	SO1310	-8622.5	133	14	80
1626	SO1311	-8637.5	263	14	80
1627	SO1312	-8652.5	133	14	80
1628	SO1313	-8667.5	263	14	80
1629	SO1314	-8682.5	133	14	80
1630	SO1315	-8697.5	263	14	80
1631	SO1316	-8712.5	133	14	80
1632	SO1317	-8727.5	263	14	80
1633	SO1318	-8742.5	133	14	80
1634	SO1319	-8757.5	263	14	80
1635	SO1320	-8772.5	133	14	80
1636	SO1321	-8787.5	263	14	80
1637	SO1322	-8802.5	133	14	80
1638	SO1323	-8817.5	263	14	80
1639	SO1324	-8832.5	133	14	80
1640	SO1325	-8847.5	263	14	80
1641	SO1326	-8862.5	133	14	80
1642	SO1327	-8877.5	263	14	80
1643	SO1328	-8892.5	133	14	80
1644	SO1329	-8907.5	263	14	80
1645	SO1330	-8922.5	133	14	80
1646	SO1331	-8937.5	263	14	80

1647	SO1332	-8952.5	133	14	80
1648	SO1333	-8967.5	263	14	80
1649	SO1334	-8982.5	133	14	80
1650	SO1335	-8997.5	263	14	80
1651	SO1336	-9012.5	133	14	80
1652	SO1337	-9027.5	263	14	80
1653	SO1338	-9042.5	133	14	80
1654	SO1339	-9057.5	263	14	80
1655	SO1340	-9072.5	133	14	80
1656	SO1341	-9087.5	263	14	80
1657	SO1342	-9102.5	133	14	80
1658	SO1343	-9117.5	263	14	80
1659	SO1344	-9132.5	133	14	80
1660	SO1345	-9147.5	263	14	80
1661	SO1346	-9162.5	133	14	80
1662	SO1347	-9177.5	263	14	80
1663	SO1348	-9192.5	133	14	80
1664	SO1349	-9207.5	263	14	80
1665	SO1350	-9222.5	133	14	80
1666	SO1351	-9237.5	263	14	80
1667	SO1352	-9252.5	133	14	80
1668	SO1353	-9267.5	263	14	80
1669	SO1354	-9282.5	133	14	80
1670	SO1355	-9297.5	263	14	80
1671	SO1356	-9312.5	133	14	80
1672	SO1357	-9327.5	263	14	80
1673	SO1358	-9342.5	133	14	80
1674	SO1359	-9357.5	263	14	80
1675	SO1360	-9372.5	133	14	80
1676	SO1361	-9387.5	263	14	80
1677	SO1362	-9402.5	133	14	80
1678	SO1363	-9417.5	263	14	80
1679	SO1364	-9432.5	133	14	80
1680	SO1365	-9447.5	263	14	80
1681	SO1366	-9462.5	133	14	80
1682	SO1367	-9477.5	263	14	80
1683	SO1368	-9492.5	133	14	80
1684	SO1369	-9507.5	263	14	80
1685	SO1370	-9522.5	133	14	80
1686	SO1371	-9537.5	263	14	80
1687	SO1372	-9552.5	133	14	80
1688	SO1373	-9567.5	263	14	80
1689	SO1374	-9582.5	133	14	80
1690	SO1375	-9597.5	263	14	80
1691	SO1376	-9612.5	133	14	80
1692	SO1377	-9627.5	263	14	80
1693	SO1378	-9642.5	133	14	80
1694	SO1379	-9657.5	263	14	80
1695	SO1380	-9672.5	133	14	80
1696	SO1381	-9687.5	263	14	80
1697	SO1382	-9702.5	133	14	80
1698	SO1383	-9717.5	263	14	80
1699	SO1384	-9732.5	133	14	80
1700	SO1385	-9747.5	263	14	80
1701	SO1386	-9762.5	133	14	80
1702	SO1387	-9777.5	263	14	80
1703	SO1388	-9792.5	133	14	80
1704	SO1389	-9807.5	263	14	80
1705	SO1390	-9822.5	133	14	80
1706	SO1391	-9837.5	263	14	80
1707	SO1392	-9852.5	133	14	80

FITIPOWER CONFIDENTIAL
NO DISCLOSURE

1708	SO1393	-9867.5	263	14	80
1709	SO1394	-9882.5	133	14	80
1710	SO1395	-9897.5	263	14	80
1711	SO1396	-9912.5	133	14	80
1712	SO1397	-9927.5	263	14	80
1713	SO1398	-9942.5	133	14	80
1714	SO1399	-9957.5	263	14	80
1715	SO1400	-9972.5	133	14	80
1716	SO1401	-9987.5	263	14	80
1717	SO1402	-10002.5	133	14	80
1718	SO1403	-10017.5	263	14	80
1719	SO1404	-10032.5	133	14	80
1720	SO1405	-10047.5	263	14	80
1721	SO1406	-10062.5	133	14	80
1722	SO1407	-10077.5	263	14	80
1723	SO1408	-10092.5	133	14	80
1724	SO1409	-10107.5	263	14	80
1725	SO1410	-10122.5	133	14	80
1726	SO1411	-10137.5	263	14	80
1727	SO1412	-10152.5	133	14	80
1728	SO1413	-10167.5	263	14	80
1729	SO1414	-10182.5	133	14	80
1730	SO1415	-10197.5	263	14	80
1731	SO1416	-10212.5	133	14	80
1732	SO1417	-10227.5	263	14	80
1733	SO1418	-10242.5	133	14	80
1734	SO1419	-10257.5	263	14	80
1735	SO1420	-10272.5	133	14	80
1736	SO1421	-10287.5	263	14	80
1737	SO1422	-10302.5	133	14	80
1738	SO1423	-10317.5	263	14	80
1739	SO1424	-10332.5	133	14	80
1740	SO1425	-10347.5	263	14	80
1741	SO1426	-10362.5	133	14	80
1742	SO1427	-10377.5	263	14	80
1743	SO1428	-10392.5	133	14	80
1744	SO1429	-10407.5	263	14	80
1745	SO1430	-10422.5	133	14	80
1746	SO1431	-10437.5	263	14	80
1747	SO1432	-10452.5	133	14	80
1748	SO1433	-10467.5	263	14	80
1749	SO1434	-10482.5	133	14	80
1750	SO1435	-10497.5	263	14	80
1751	SO1436	-10512.5	133	14	80
1752	SO1437	-10527.5	263	14	80
1753	SO1438	-10542.5	133	14	80
1754	SO1439	-10557.5	263	14	80
1755	SO1440	-10572.5	133	14	80
1756	SO1441	-10587.5	263	14	80
1757	SO1442	-10602.5	133	14	80
1758	SO1443	-10617.5	263	14	80
1759	SO1444	-10632.5	133	14	80
1760	SO1445	-10647.5	263	14	80
1761	SO1446	-10662.5	133	14	80
1762	SO1447	-10677.5	263	14	80
1763	SO1448	-10692.5	133	14	80
1764	SO1449	-10707.5	263	14	80
1765	SO1450	-10722.5	133	14	80
1766	SO1451	-10737.5	263	14	80
1767	SO1452	-10752.5	133	14	80
1768	SO1453	-10767.5	263	14	80

1769	SO1454	-10782.5	133	14	80
1770	SO1455	-10797.5	263	14	80
1771	SO1456	-10812.5	133	14	80
1772	SO1457	-10827.5	263	14	80
1773	SO1458	-10842.5	133	14	80
1774	SO1459	-10857.5	263	14	80
1775	SO1460	-10872.5	133	14	80
1776	SO1461	-10887.5	263	14	80
1777	SO1462	-10902.5	133	14	80
1778	SO1463	-10917.5	263	14	80
1779	SO1464	-10932.5	133	14	80
1780	SO1465	-10947.5	263	14	80
1781	SO1466	-10962.5	133	14	80
1782	SO1467	-10977.5	263	14	80
1783	SO1468	-10992.5	133	14	80
1784	SO1469	-11007.5	263	14	80
1785	SO1470	-11022.5	133	14	80
1786	SO1471	-11037.5	263	14	80
1787	SO1472	-11052.5	133	14	80
1788	SO1473	-11067.5	263	14	80
1789	SO1474	-11082.5	133	14	80
1790	SO1475	-11097.5	263	14	80
1791	SO1476	-11112.5	133	14	80
1792	SO1477	-11127.5	263	14	80
1793	SO1478	-11142.5	133	14	80
1794	SO1479	-11157.5	263	14	80
1795	SO1480	-11172.5	133	14	80
1796	SO1481	-11187.5	263	14	80
1797	SO1482	-11202.5	133	14	80
1798	SO1483	-11217.5	263	14	80
1799	SO1484	-11232.5	133	14	80
1800	SO1485	-11247.5	263	14	80
1801	SO1486	-11262.5	133	14	80
1802	SO1487	-11277.5	263	14	80
1803	SO1488	-11292.5	133	14	80
1804	SO1489	-11307.5	263	14	80
1805	SO1490	-11322.5	133	14	80
1806	SO1491	-11337.5	263	14	80
1807	SO1492	-11352.5	133	14	80
1808	SO1493	-11367.5	263	14	80
1809	SO1494	-11382.5	133	14	80
1810	SO1495	-11397.5	263	14	80
1811	SO1496	-11412.5	133	14	80
1812	SO1497	-11427.5	263	14	80
1813	SO1498	-11442.5	133	14	80
1814	SO1499	-11457.5	263	14	80
1815	SO1500	-11472.5	133	14	80
1816	SO1501	-11487.5	263	14	80
1817	SO1502	-11502.5	133	14	80
1818	SO1503	-11517.5	263	14	80
1819	SO1504	-11532.5	133	14	80
1820	SO1505	-11547.5	263	14	80
1821	SO1506	-11562.5	133	14	80
1822	SO1507	-11577.5	263	14	80
1823	SO1508	-11592.5	133	14	80
1824	SO1509	-11607.5	263	14	80
1825	SO1510	-11622.5	133	14	80
1826	SO1511	-11637.5	263	14	80
1827	SO1512	-11652.5	133	14	80
1828	SO1513	-11667.5	263	14	80
1829	SO1514	-11682.5	133	14	80

FITIPOWER CONFIDENTIAL
NO DISCLOSURE

1830	SO1515	-11697.5	263	14	80
1831	SO1516	-11712.5	133	14	80
1832	SO1517	-11727.5	263	14	80
1833	SO1518	-11742.5	133	14	80
1834	SO1519	-11757.5	263	14	80
1835	SO1520	-11772.5	133	14	80
1836	SO1521	-11787.5	263	14	80
1837	SO1522	-11802.5	133	14	80
1838	SO1523	-11817.5	263	14	80
1839	SO1524	-11832.5	133	14	80
1840	SO1525	-11847.5	263	14	80
1841	SO1526	-11862.5	133	14	80
1842	SO1527	-11877.5	263	14	80
1843	SO1528	-11892.5	133	14	80
1844	SO1529	-11907.5	263	14	80
1845	SO1530	-11922.5	133	14	80
1846	SO1531	-11937.5	263	14	80
1847	SO1532	-11952.5	133	14	80
1848	SO1533	-11967.5	263	14	80
1849	SO1534	-11982.5	133	14	80
1850	SO1535	-11997.5	263	14	80
1851	SO1536	-12012.5	133	14	80
1852	SHIELDING	-12055	268	30	70
1853	COM1_OUT	-12105	268	30	70
1854	COM1_OUT	-12155	268	30	70
1855	SHIELDING	-12205	268	30	70
1856	F_CtrlR	-12403	288	80	30
1857	OEVR	-12303	248	80	30
1858	SYNC1R	-12403	208	80	30
1859	SYNC2R	-12303	168	80	30
1860	UDR	-12403	128	80	30
1861	CKVR	-12303	88	80	30
1862	STV2R	-12403	48	80	30
1863	STV1R	-12303	8	80	30
1864	F_CtrlR	-12403	-32	80	30
1865	STBNR	-12303	-72	80	30

ALM		
LEFT	-12131.5	125.5
RIGHT	12131.5	125.5

FITIPOWER CONFIDENTIAL
NO DISCLOSURE

17. REVISION HISTORY

Reversion	Content	Date
1.0	New version	2020/07/22

FITIPOWER CONFIDENTIAL
NO DISCLOSURE

Appendix A : BIST pattern

R→G→B→Black→White→Color Bar→Horizontal 256 gray scale→Vertical 256 gray scale→Crosstalk pattern →Chess board (L255/L0)→Flicker pattern→Black background with white out frame

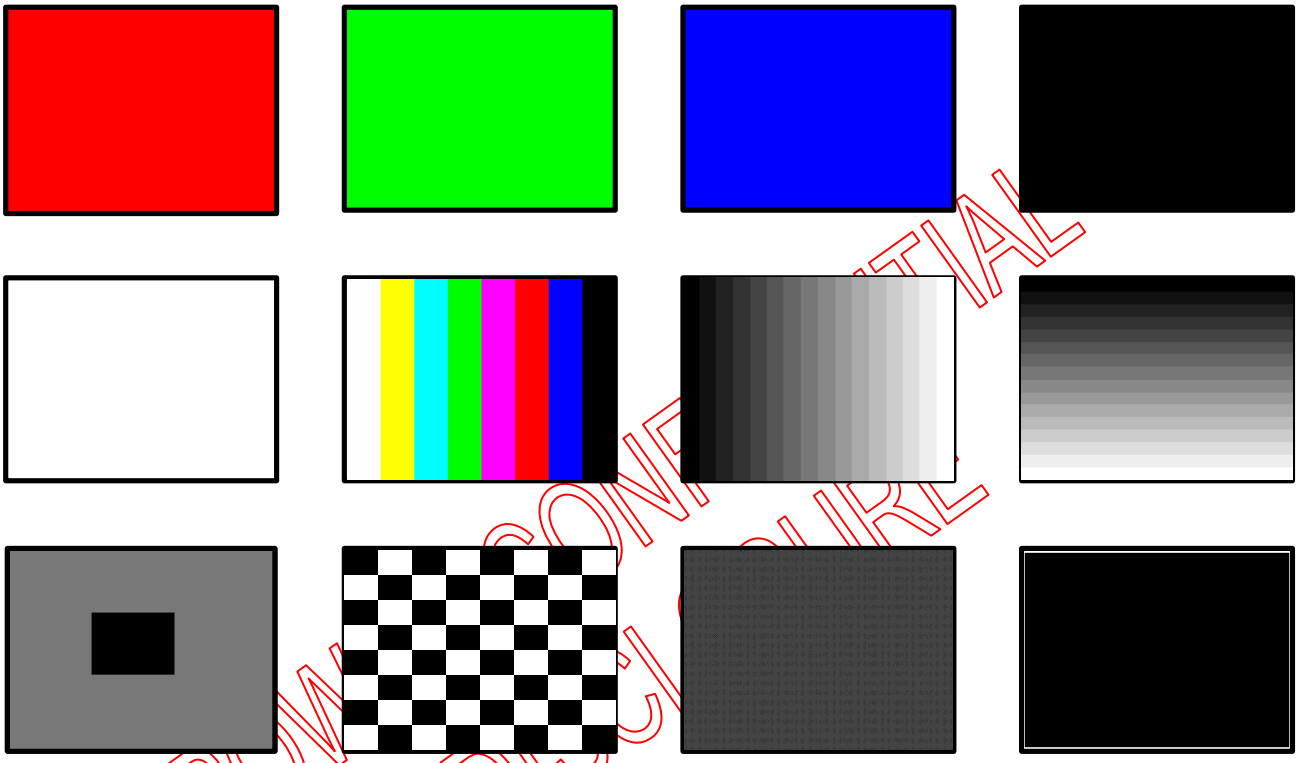

FITIPOWER CONFIDENTIAL
NO DISCLOSURE